ASSEMBLY INSTRUCTION FOR ACME FURNITURE

MODEL#BD05841EK

Thank you for purchasing the quality product. Be sure to check all packing material carefully for small parts which may have come loose inside the carton during shipment. Separate, identify and count all parts and metal hardware. Compare with all parts list to be sure all parts are present. If any part(s) are missing or damaged, please contact your local furniture dealer. For efficient and speedy service, please indicate the model number and code letter of part(s) needed.

***** Do not fully tighten screws until fully assembled *****

	COMPONENT PARTS	
DESCRIPTION	**PART NAME**	**Q'TY (PCS)**
①	**HEADBOARD**	1
②	**FOOTBOARD**	1
③	**SIDE RAIL - LEFT** 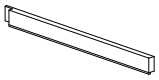	1
④	**SIDE RAIL - RIGHT** 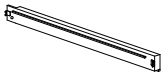	1
⑤	**CENTRE RAIL**	2
⑥	**SUPPORT LEG**	6
⑦	**SLAT (1 SET - 13PCS)**	1
⑧	**HEADBOARD LEG**	2
⑨	**FOOTBOARD LEG**	2

HARDWARE REQUIRED

Ⓐ		JCBB SCREW	M8 x 35mm	8 PCS
Ⓑ	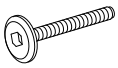	JCBB SCREW	M8 x 100mm	2 PCS
Ⓒ		JCBC SCREW	M6 x 35mm	6 PCS
Ⓓ		SPRING WASHER	$\frac{5}{16}$ "	16 PCS
Ⓔ		FLAT WASHER	$\frac{5}{16}$ "	10 PCS
Ⓕ		FLAT WASHER	$\frac{1}{4}$ "	6 PCS
Ⓖ		CSK SCREW	M4 x 30mm	46 PCS
Ⓗ		ALLEN KEY	M4	1 PC
Ⓙ		ALLEN KEY	M5	1 PC

Attention

***** Some number parts listed on the instruction sheet may not be in parts beg as they may already be assembled. Carefully check parts and packing materials prior to ordering replacements.**

How to assemble:

STEP 1

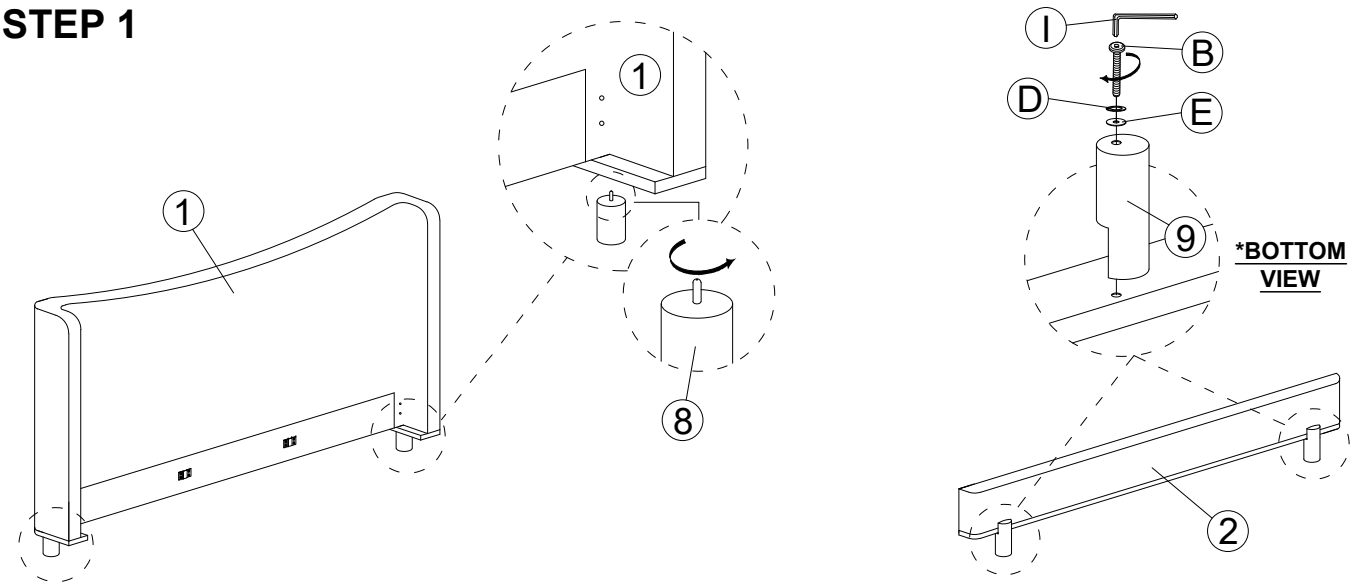

STEP 2

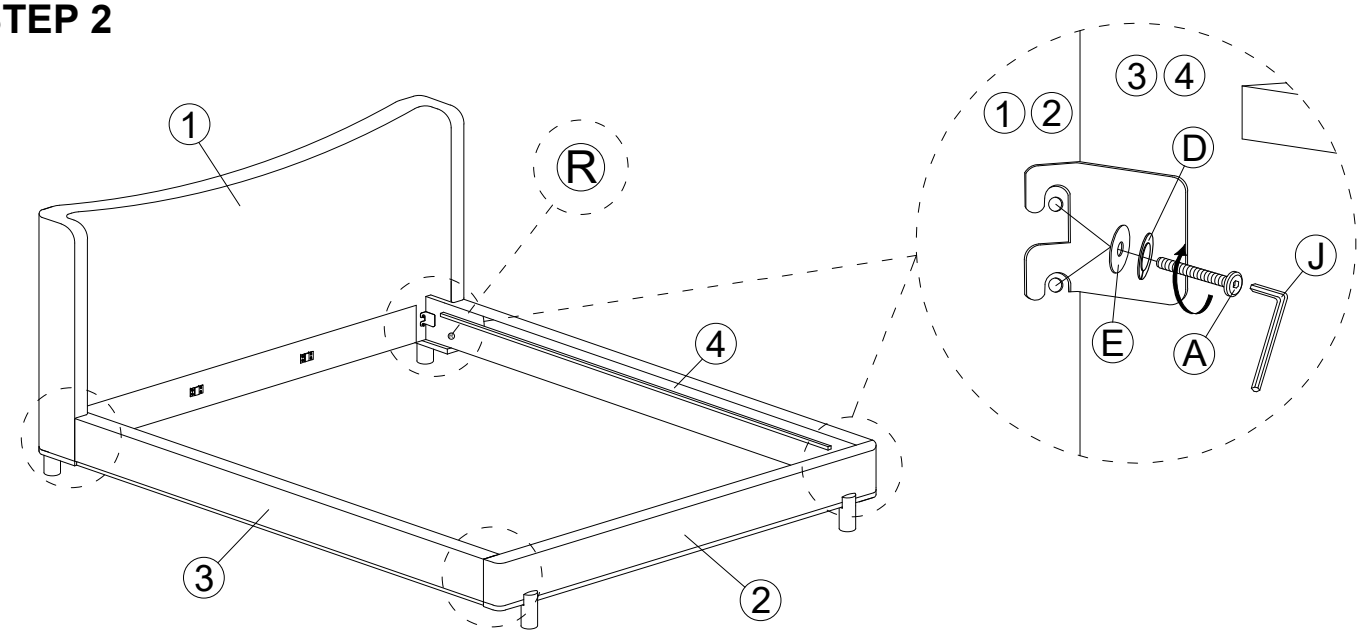

STEP 3

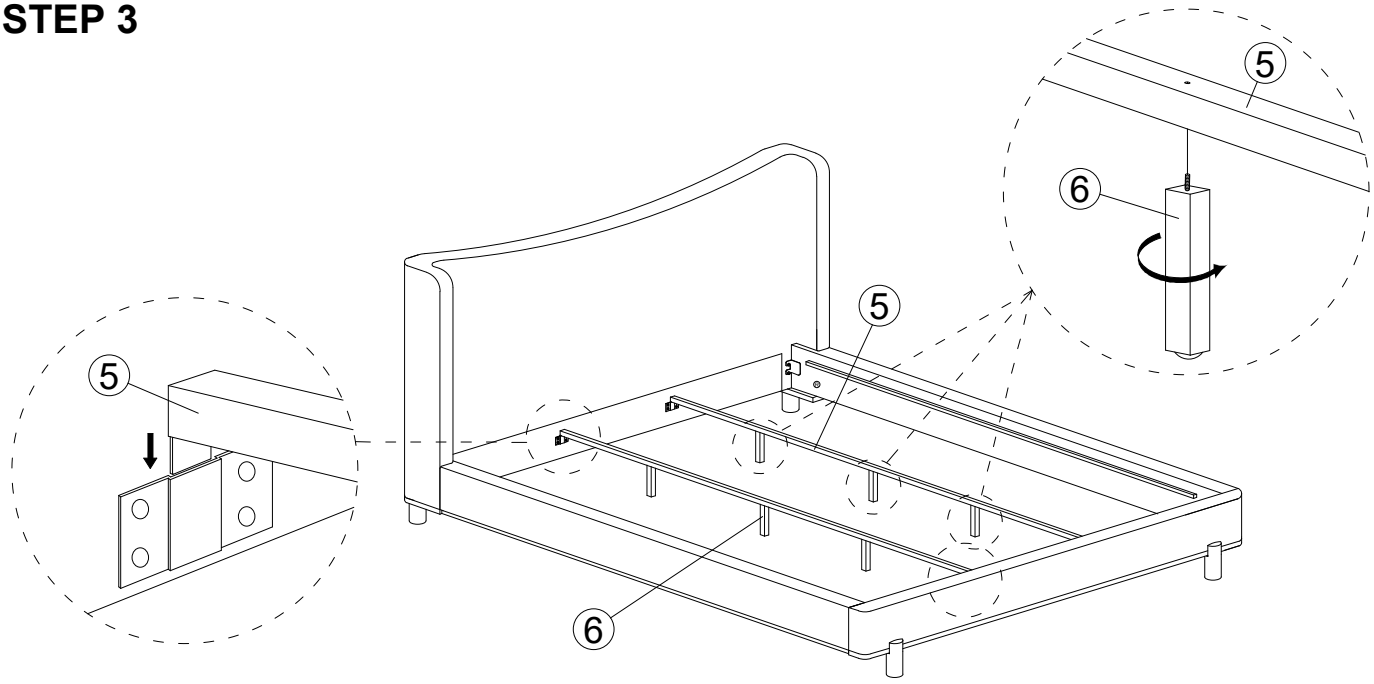

STEP 4

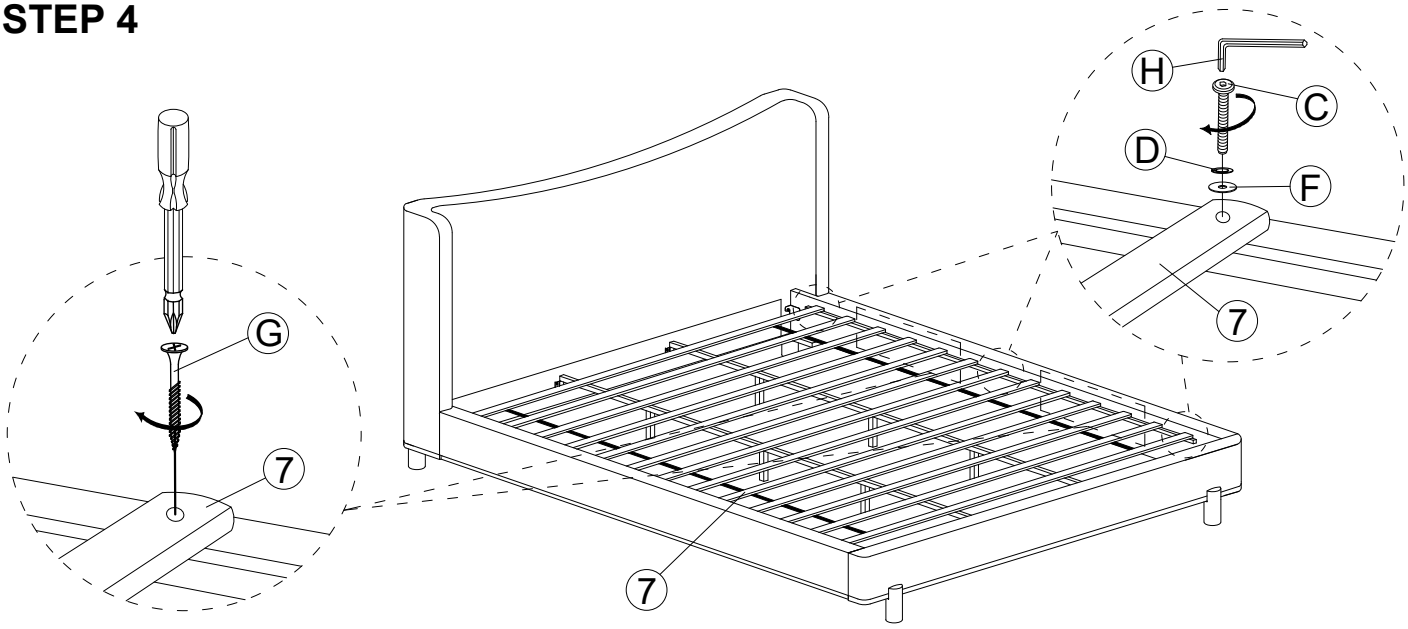

STEP 5

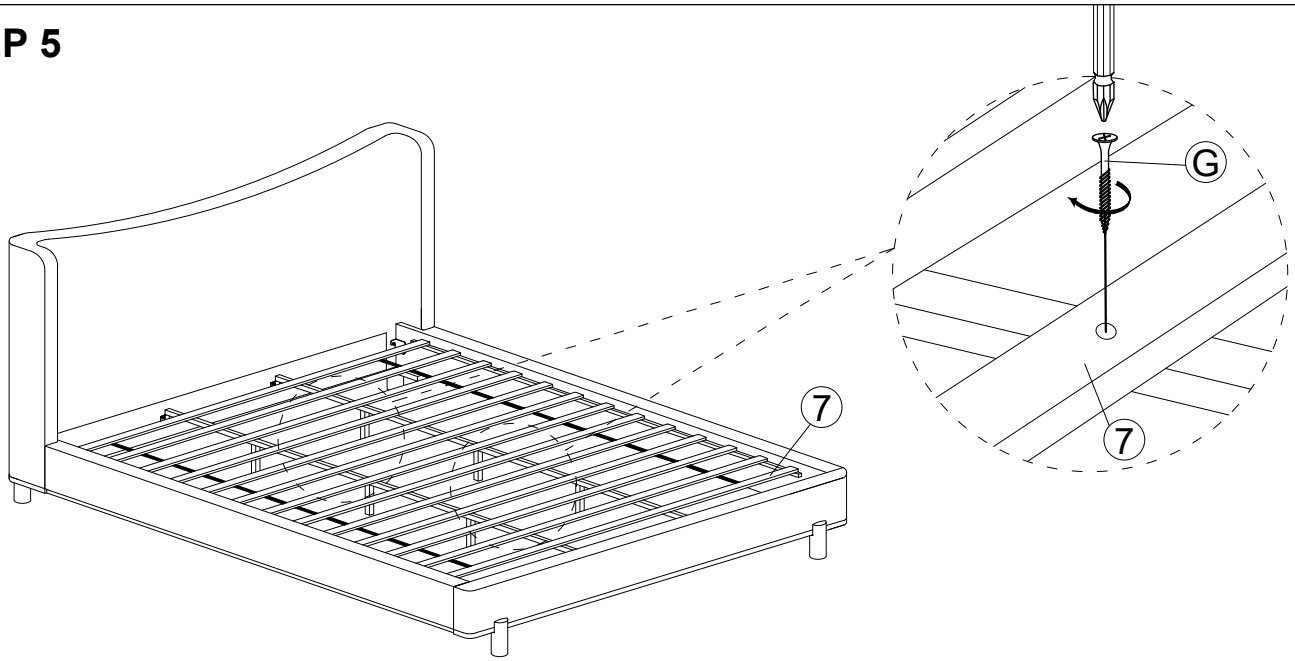
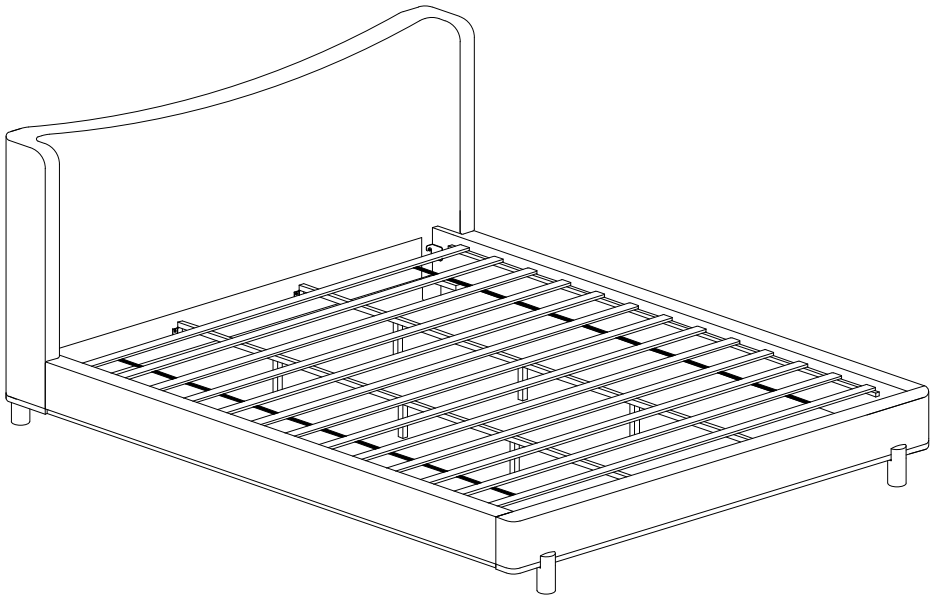
COMPLETED ASSEMBLY