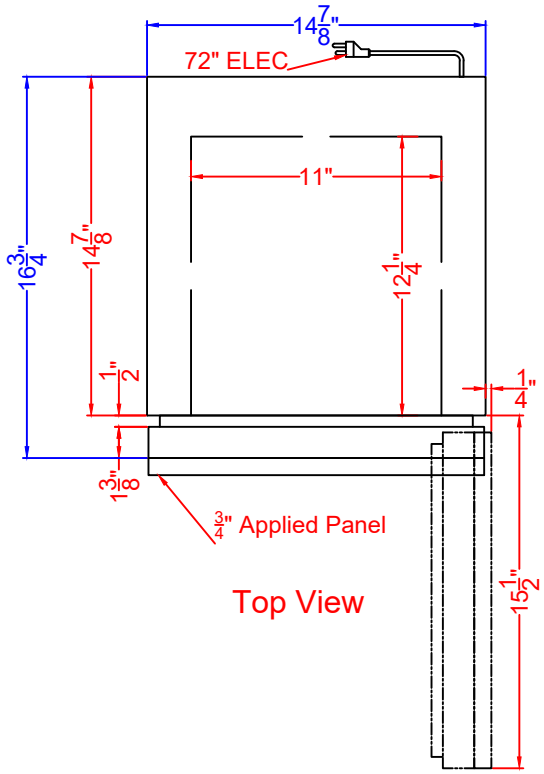

Top View

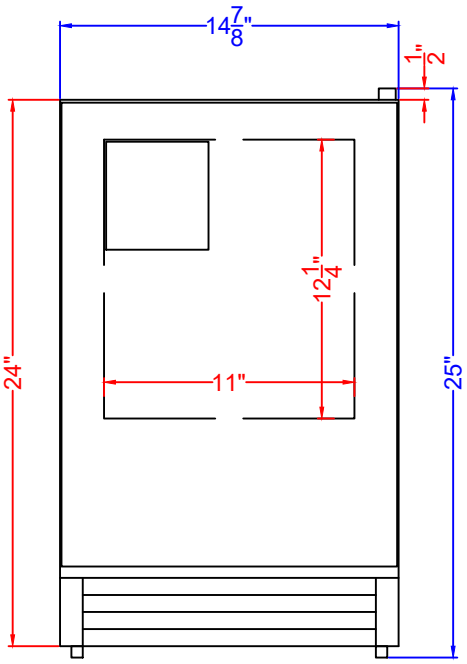

Front View

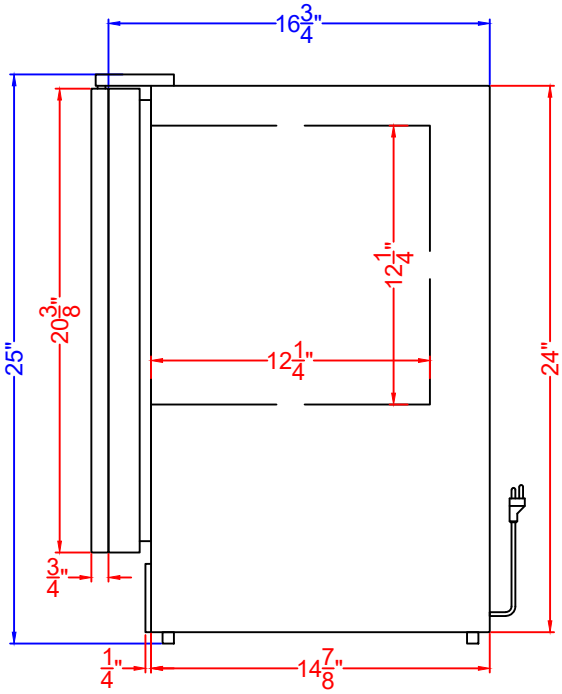

Profile View

BIM26IF

Icemaker

08/14/24

SUMMIT

FELIX STORCH, INC.

www.summitappliance.com

718-893-3900