# 88 5008 941
# Monarch Kitchen Island

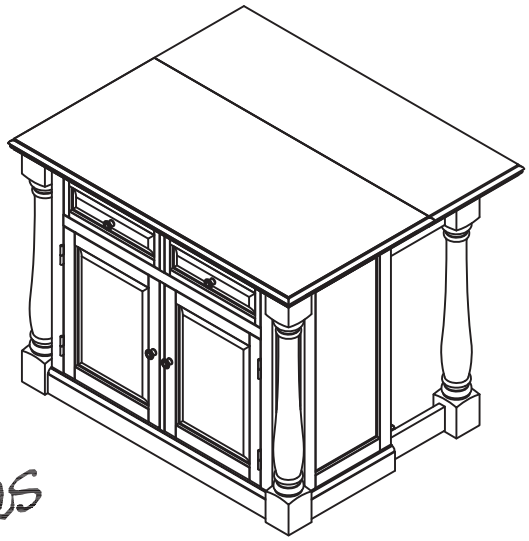

Home Styles

**Patent 8,584,600 B2**

**IMPORTANT NOTE**

Carefully remove all the parts from the carton and put them individually on a soft cloth to prevent scratches or other damages occuring to the parts.

We have taken great care in the design of this product and request that you carefully and strictly follow our assembly instructions to ensure a completed product as it was designed.

## Part List

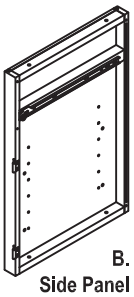

**B. Side Panel** 1 pc.

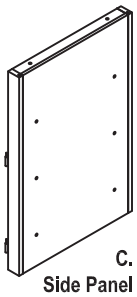

**C. Side Panel** 1 pc.

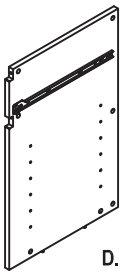

**D. Middle Panel** 1 pc.

**E. Front Rail** 1 pc.

**F. Front Rail** 1 pc.

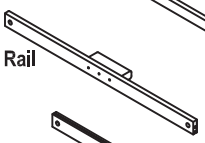

**G. Back Rail** 1 pc.

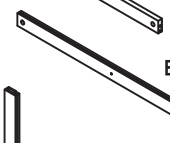

**H. Back Rail** 1 pc.

**M. Door** 1 pc.

**N. Door** 1 pc.

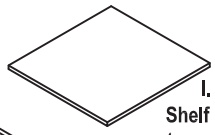

**I. Shelf** 4 pcs.

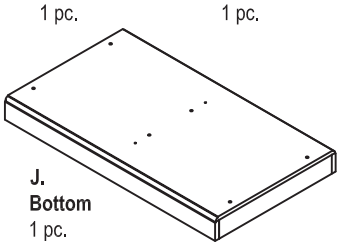

**J. Bottom** 1 pc.

**K. Back Panel** 2 pcs.

**L. Back Piece** 1 pc.

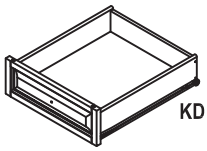

**O. KD Drawer** 2 pcs.

*(Knock-Down Construction, please refer to the last page of instructions for steps to complete drawer assembly)*

## Hardware List

**Hex Wrench** 1 pc.

**Small Hex Wrench** 1 pc.

**Adjustable Pln** 16 pcs. (+1 extra)

**Cam Lock** 15 pcs. (+1 extra)

**Cam Lock Screw** 15 pcs. (+1 extra)

**1/2" Round Head Screw** 4 pcs. (+1 extra)

**1 1/4" Flat Head Screw** 16 pcs. (+1 extra)

**3/4" Flat Head Screw** 12 pcs. (+1 extra)

**Machine Screw** 4 pcs.

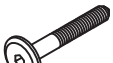

**Head Cap Bolt (long)** 8 pcs. (+1 extra)

**Head Cap Bolt (short)** 12 pcs. (+1 extra)

**Catches with Double Roller** 2 pcs.

**Pull Handle** 4 pcs.

**Flat Washer** 8 pcs. (+1 extra)

## For assembly also need the following:

**88 5008 942 Monarch Kitchen Island** Carton quantity: 1

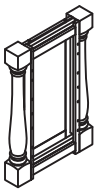

**P. Frame Leg** 1 pc.

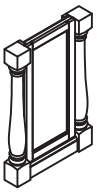

**Q. Frame Leg** 1 pc.

**88 5008 943 Monarch Kitchen Island with Oak Top or 88 5009 943 Monarch Kitchen Island with Granite Top** Carton quantity: 1

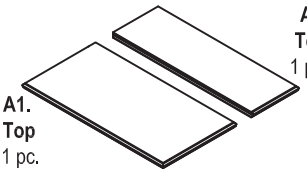

**A2. Top** 1 pc.

**A1. Top** 1 pc.

**3/4" Flat Head Screw** 12 pcs. (+1 extra)

***Tools Required For Assembly :*** Phillips screwdriver

***Tools recommended for assembly:*** Level

***Home Styles Consumer Assistance Line 888-680-7460 and 877-831-0319***

***servicedesk@homestyles-furniture.com***

Revised date : 27 Nov 2013

*IMPORTANT*

** Please keep Hex Wrench in a safe place as you may need to tighten up the Head Cap Bolts in the future.*

** Do not tighten up all the screws until each part is properly assembled.*

** Use a soft cloth between these parts and the floor.*

** After assembly, item must be level to work properly. Use the included adjustable levelers to level.*

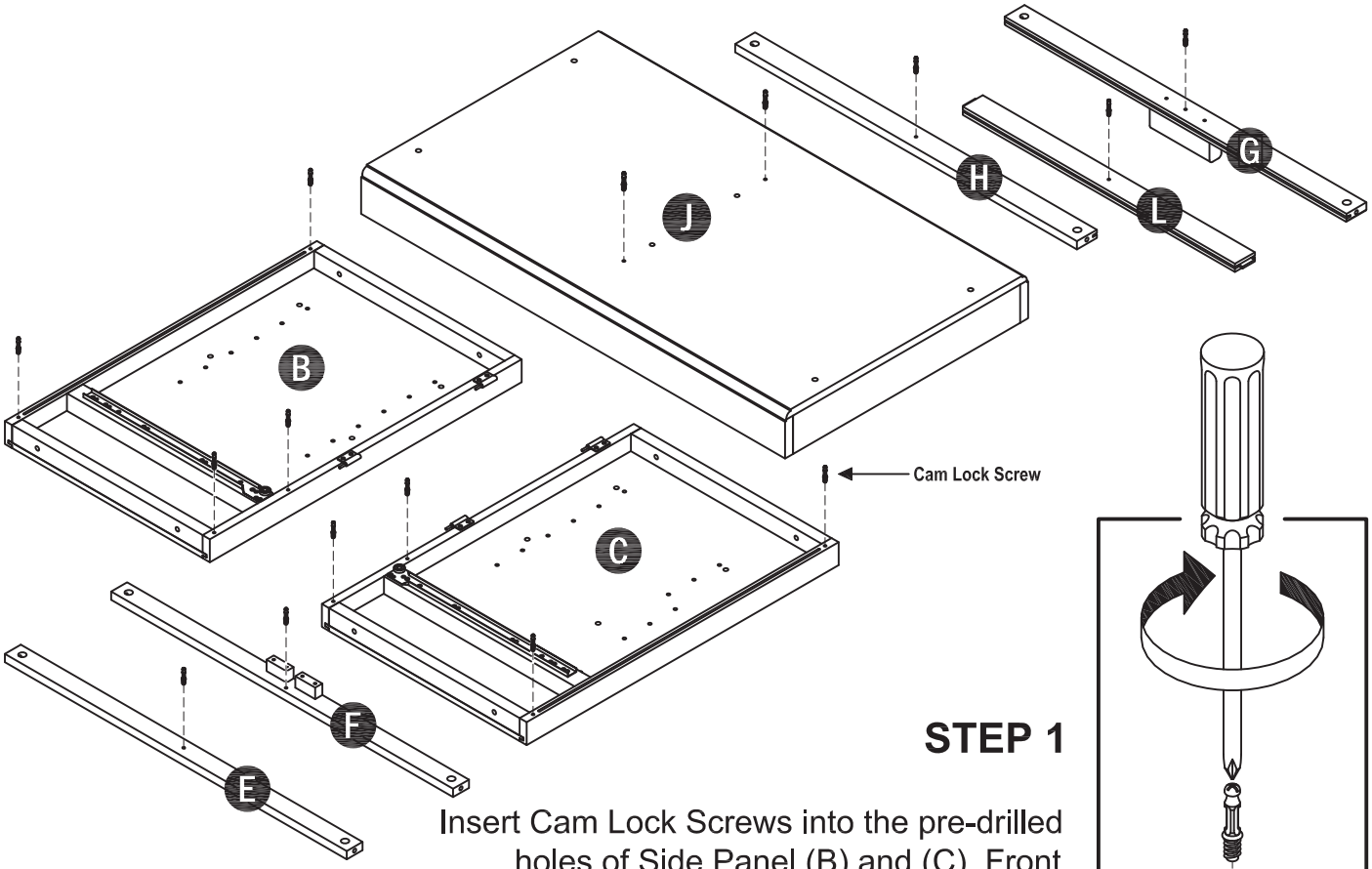


## STEP 1

Insert Cam Lock Screws into the pre-drilled holes of Side Panel (B) and (C), Front Rail (E) and (F), Back Rail (G) and (H), Bottom (J) and Back Piece (L). (See figure 1)

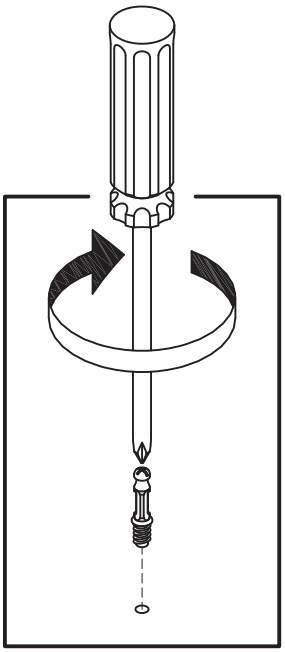

*Figure 1*

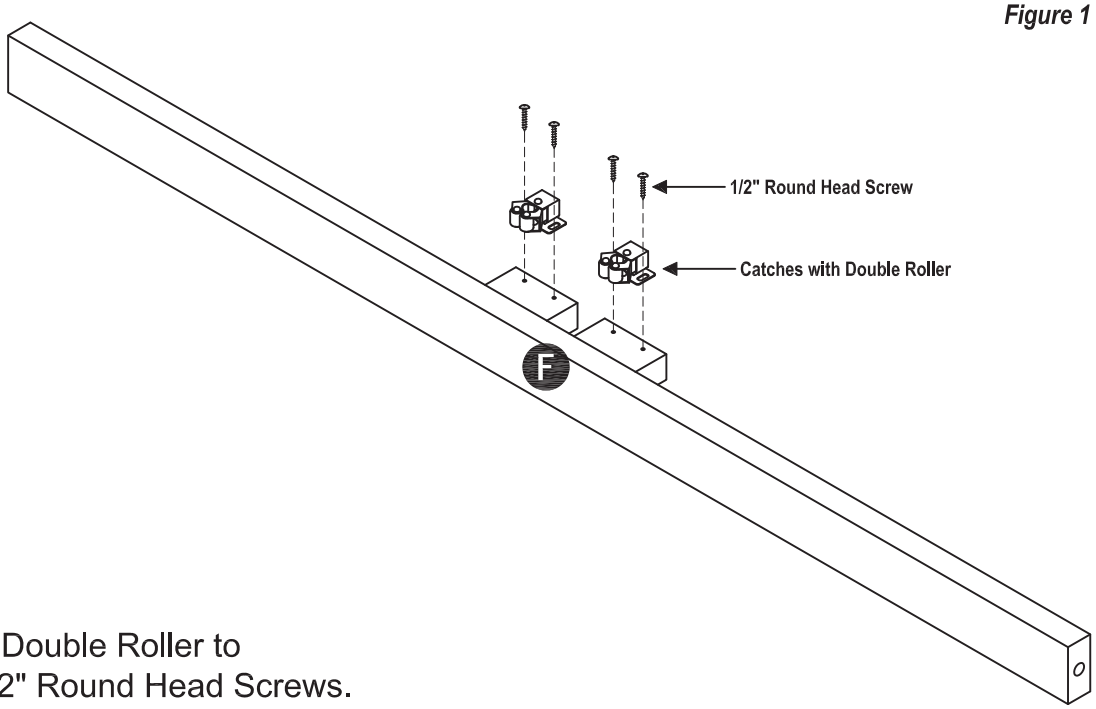


## STEP 2

Attach Catches with Double Roller to Front Rail (F) with 1/2" Round Head Screws.

## STEP 3

Slide Back Panel (K) into the groove of Back Rail (G) and (H) and Back Piece (L).

Attach Middle Panel (D) to Front Rail (E) and (F), Back Rail (G) and (H) and Back Piece (L) using Cam Locks. (See figure 2)

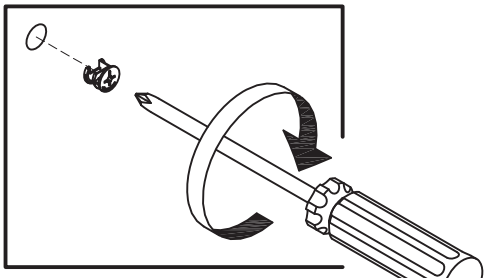

*Figure 2*

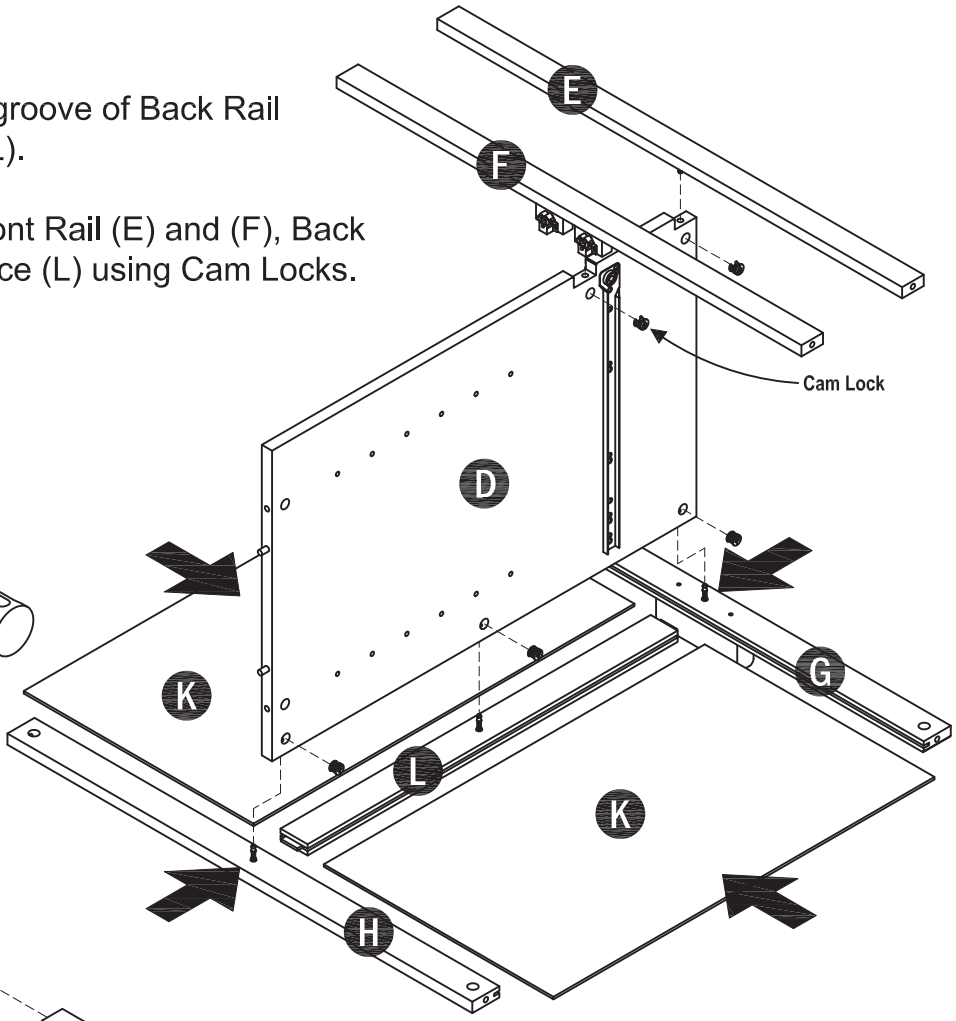


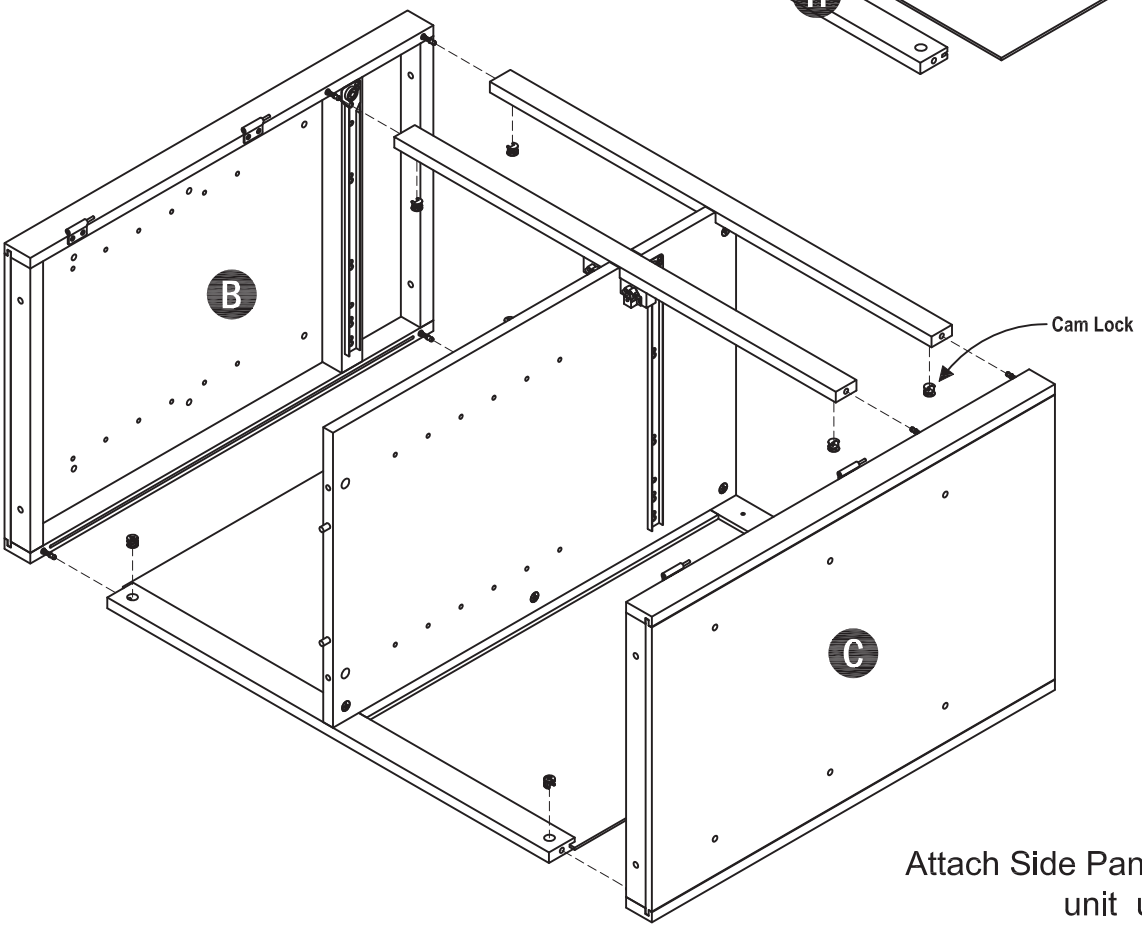


## STEP 4

Attach Side Panels (B) and (C) to unit using Cam Locks.

## STEP 5

Attch Bottom (J) to unit using Cam Locks, Head Cap Bolts (long) and Washers.

Tighten bolts using Hex Wrench. (See figure 3)

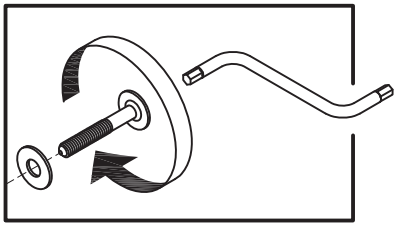

*Figure 3*

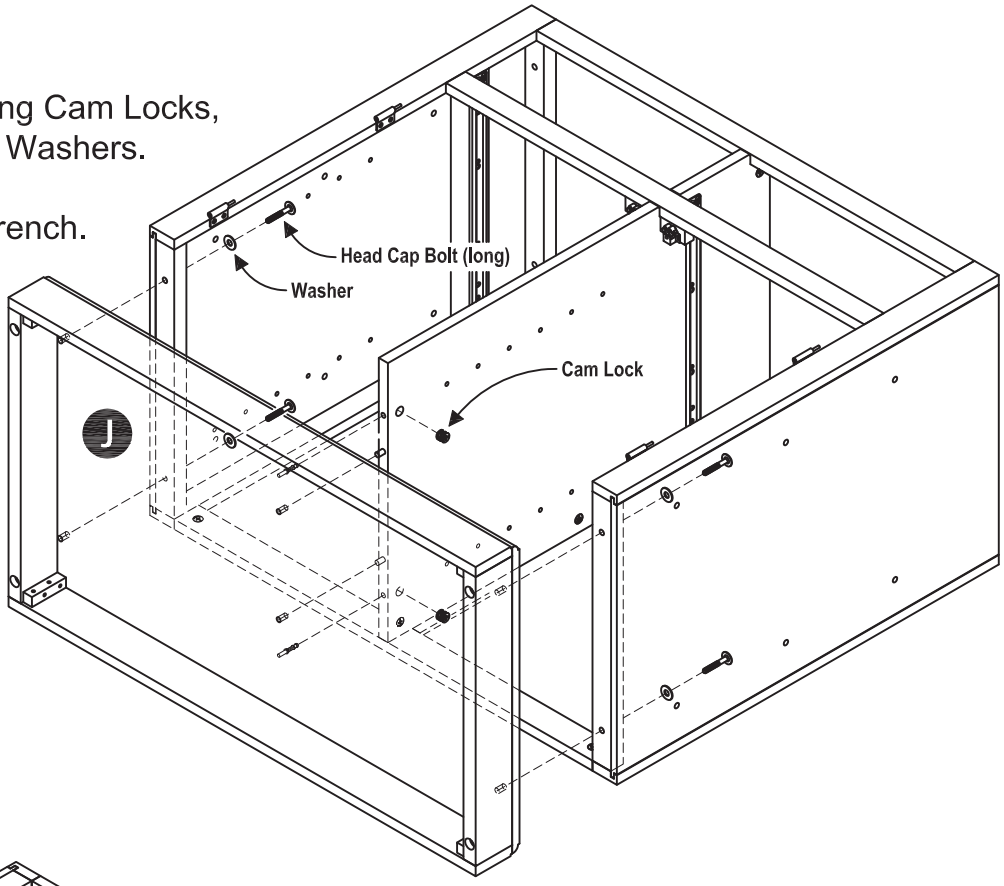


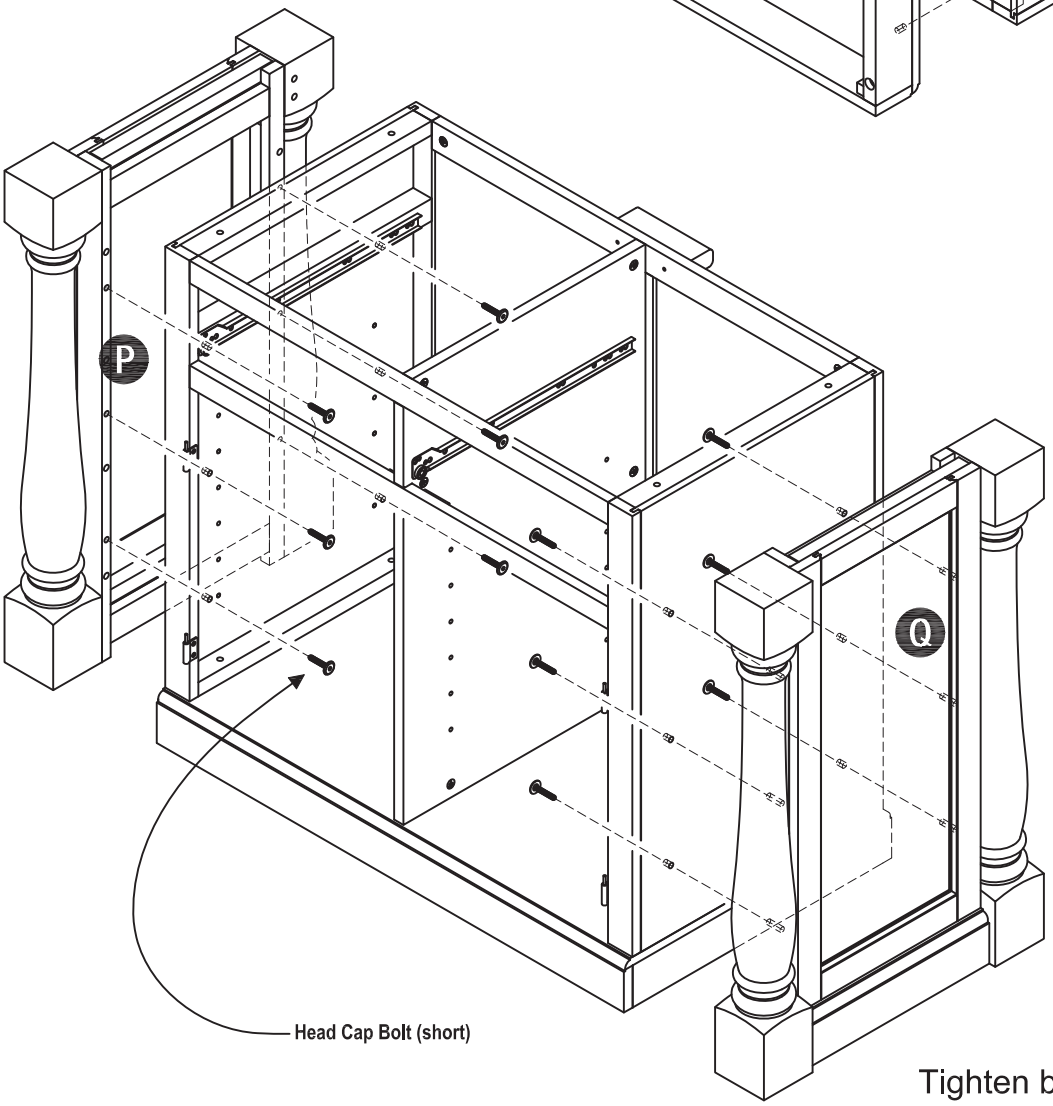


## STEP 6

Attach Frame Leg (P) and (Q) to unit using Head Cap Bolts (short).

Tighten bolts using Hex Wrench.

## STEP 7

Attach Doors (M) and (N) to the side panels, by sliding the door lift hinges into the side panel lift hinges. (see Figure 4)

Assemble Pull Handles to Door (M) and (N) with Machine Screws. (see Figure 5)

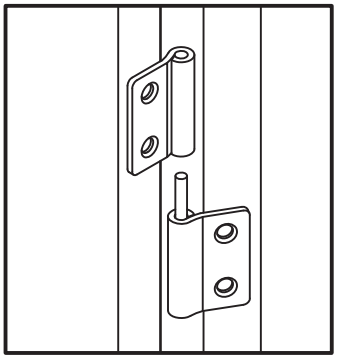

*Figure 4*

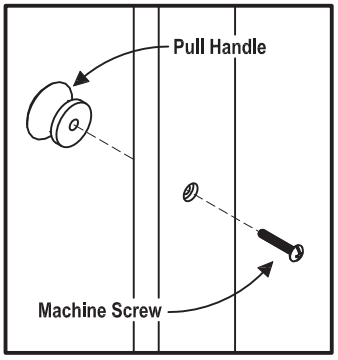


*Figure 5*

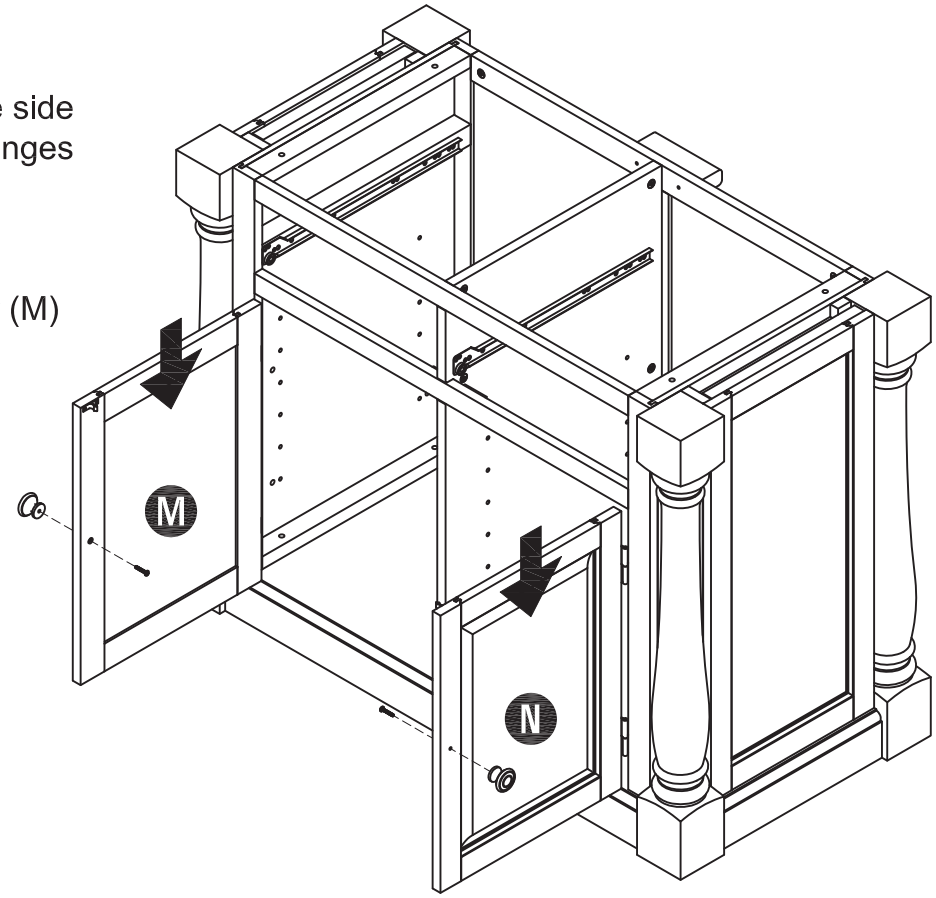


## STEP 8

Slide Drawers (O) into place.

Insert Adjustable Pins into side panels and middle panel at the desired level.

Slide Shelves (I) into position.

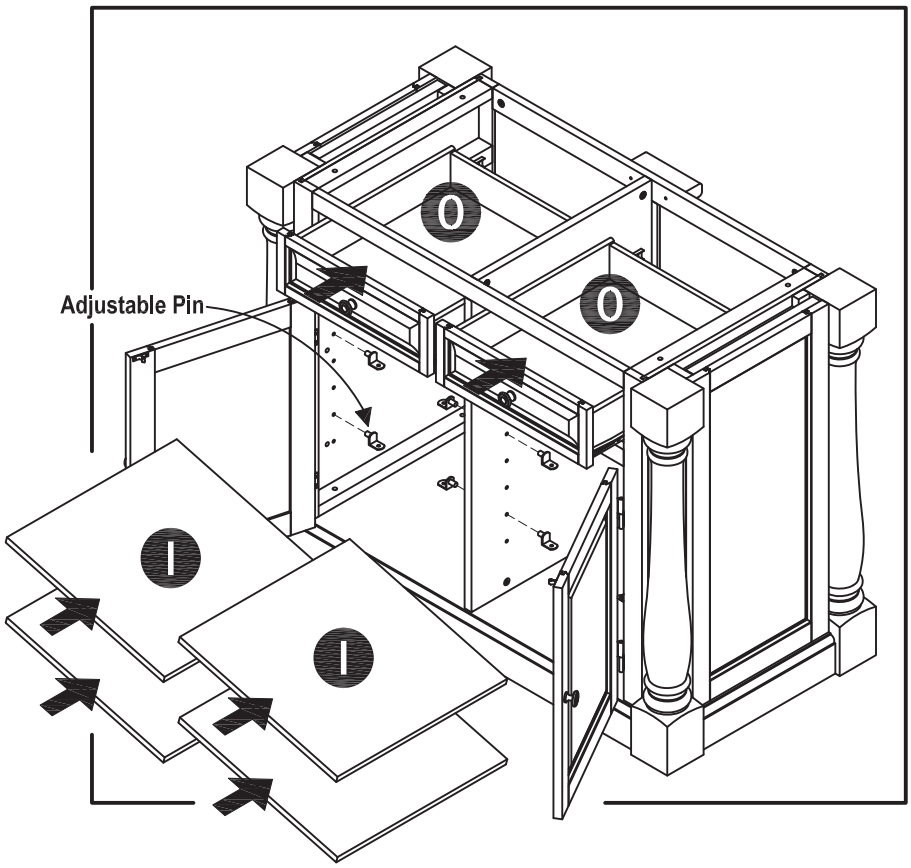

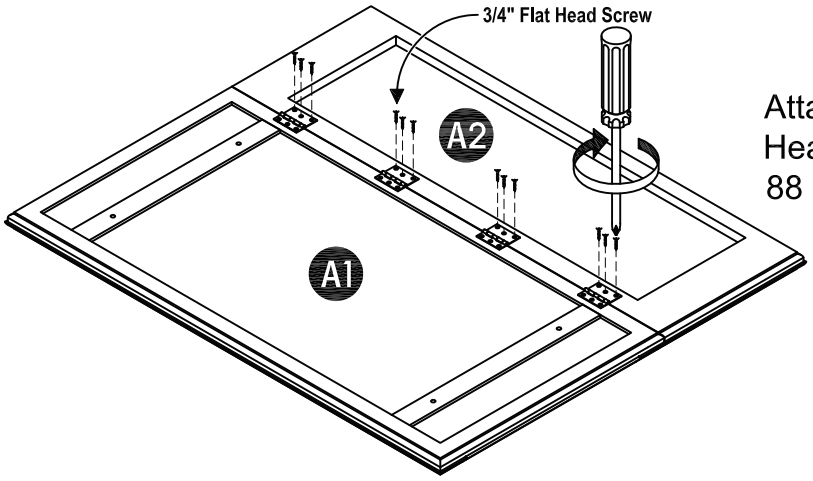


## STEP 9

Attach Top (A1) to Top (A2) using 3/4" Flat Head Screws (Hardware included in carton 88 5008 943 for Wood Top or 88 5009 943 for Granite Top).

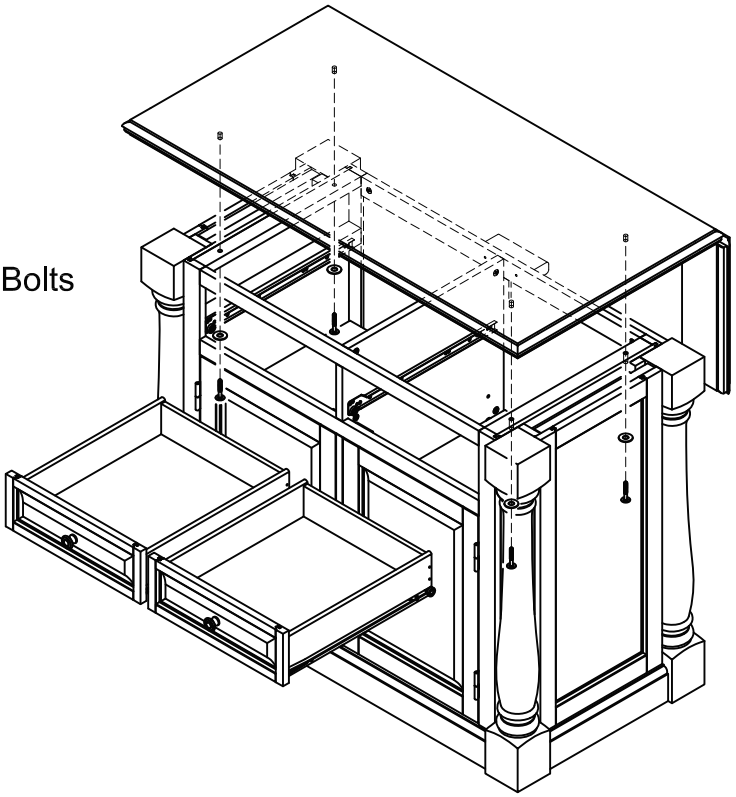

## STEP 10

Pull out the Drawers from unit.

Place Top (A) onto the unit, using Head Cap Bolts (long) and Washers.

Tighten bolts using Hex Wrench.
(see Figure 6)

Side Drawers into place.

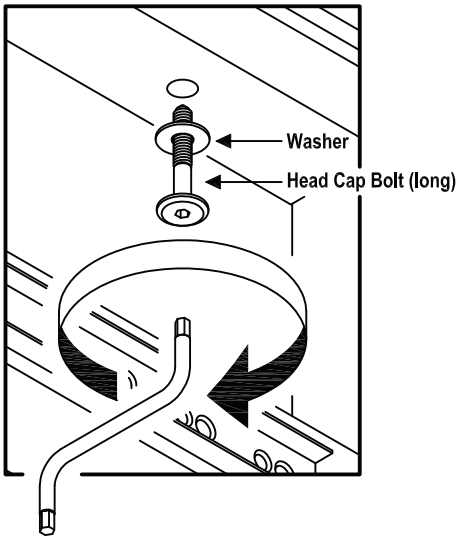


*Figure 6*

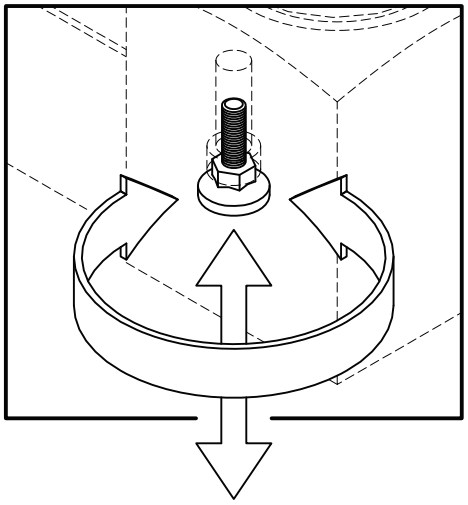

## STEP 11

To level the unit, adjust the adjustable levelers on the bottom.

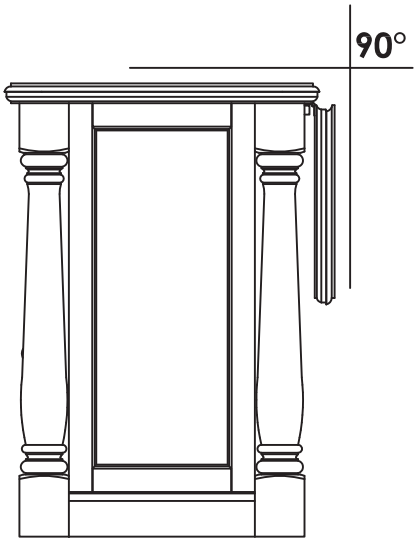


## STEP 12

When Leaf Top is down, it should be oriented vertically.

If it is not vertical and adjustment is desired, loosen the Head Cap Bolts (short) which attach Top (A) to the unit.

Slide Top (A) slightly forward or backward until the Leaf Top is oriented vertically.

Re-tighten the Head Cap Bolts. (See Figure 6)

## TOP EXTENSION INSTRUCTIONS

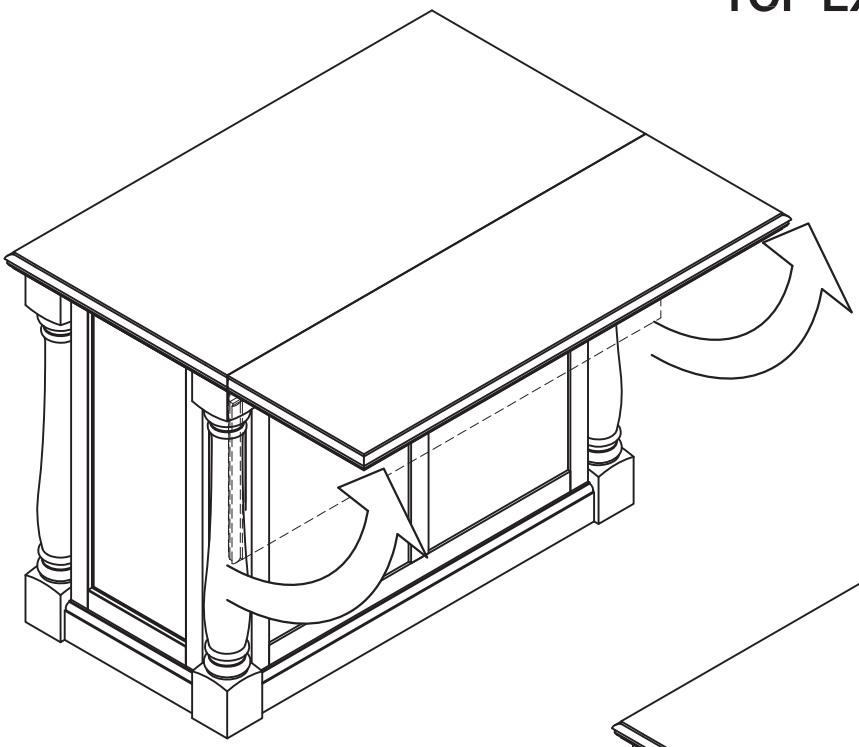

## STEP 1

Lift up the Leaf Top.

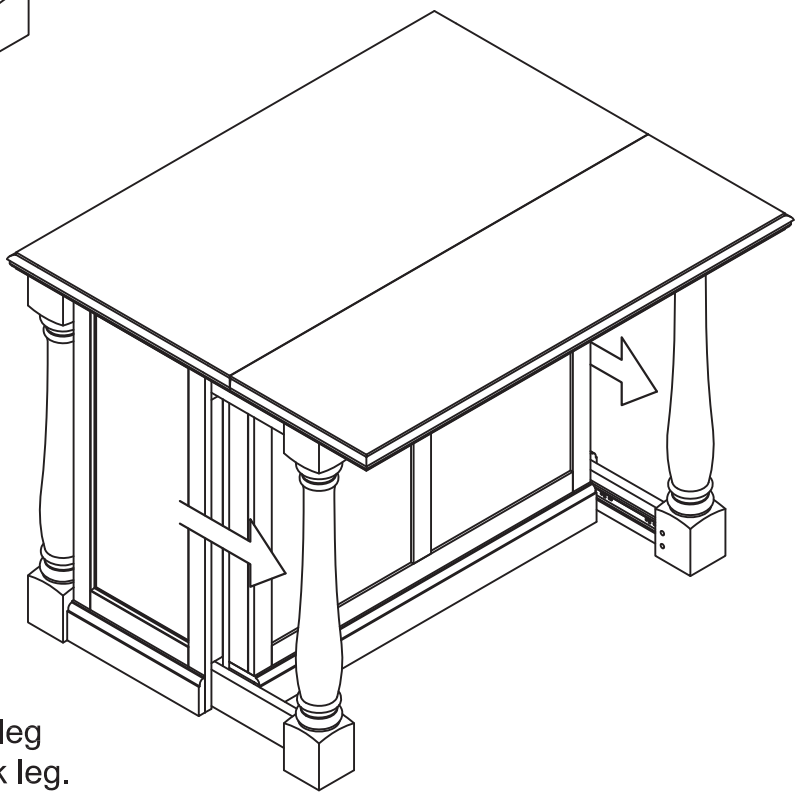

## STEP 2

Holding the Leaf Top up, pull out a back leg from the unit; then pull out the other back leg.

# Drawer (O)

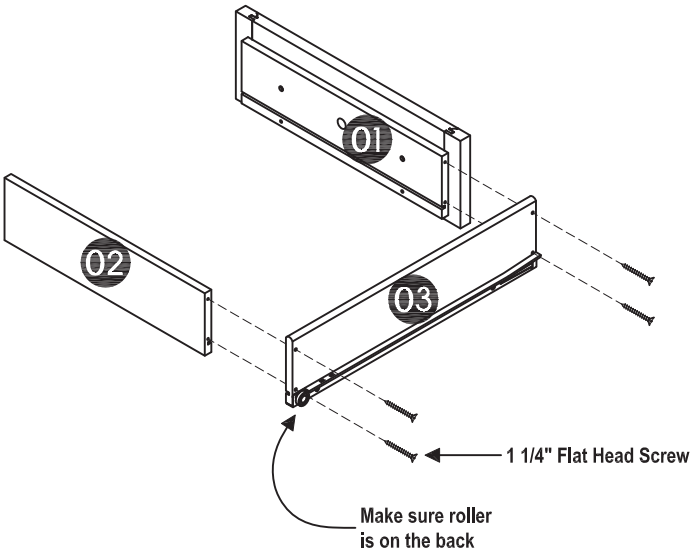


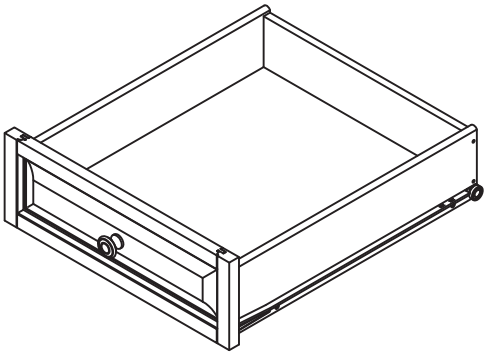

## STEP 1

Attach Side Part (O3) to Front Part (O1) and Back Part (O2) using a Phillips screwdriver and 1 1/4" Flat Head Screws.

## STEP 2

Insert Base Part (O5) into the groove.

Attach Side Part (O4) to Front Part (O1) and Back Part (O2) using a Phillips screwdriver and 1 1/4" Flat Head Screws.

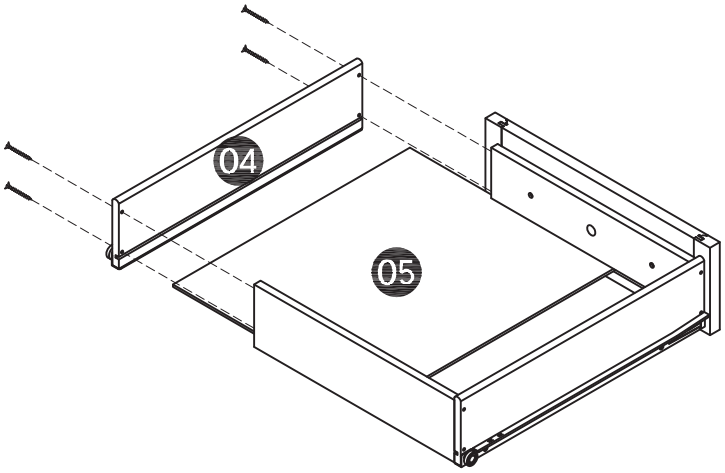


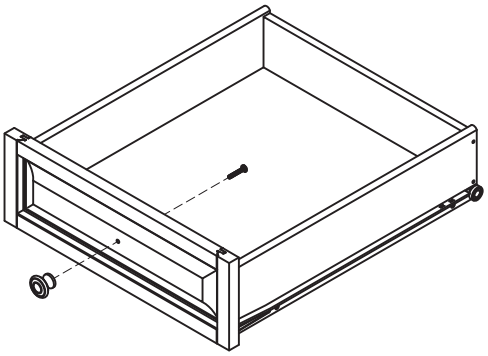

## STEP 3

Attach Pull Handles with Machine Screws.

## Part List

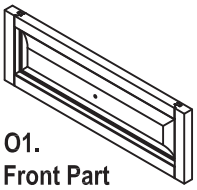

**O1.**
**Front Part**
2 pcs

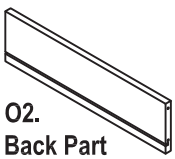

**O2.**
**Back Part**
2 pcs.

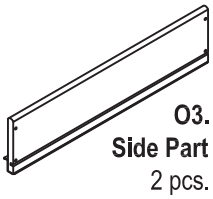

**O3.**
**Side Part**
2 pcs.

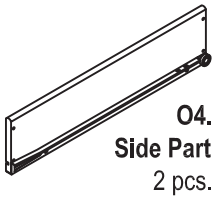

**O4.**
**Side Part**
2 pcs.

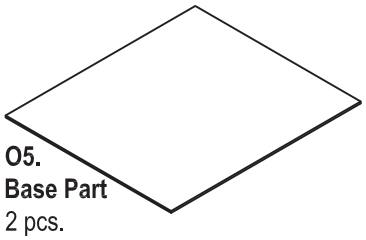

**O5.**
**Base Part**
2 pcs.

# VERY IMPORTANT !!

## CARE INSTRUCTIONS

### NEVER

USE GLASS CLEANERS ON FINISHED FURNITURE. AMMONIA WILL CHEMICALLY ATTACK THE LACQUER.

### NEVER

ALLOW LIQUIDS OF ANY KIND TO REMAIN ON THE FURNITURE. ABSORPTION CAUSES WOOD TO WARP AND SPLIT AND FINISHES TO DELAMINATE.

DO NOT WRITE DIRECTLY ON SURFACE.

**PREVENT MARKING**

DO NOT PLACE IN DIRECT SUNLIGHT.

**PREVENT FADING**

DO NOT USE COMMERCIAL WAXES AND POLISHES.

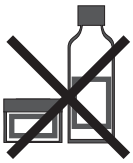

**PREVENT YELLOWING**

DO NOT PLACE HOT OBJECTS ON SURFACE.

**PREVENT FINISH DAMAGE**

DO NOT USE RUBBER BASED PLACE MATS.

**PREVENT DISCOLORING**

# TO CLEAN

USE A SOFT CLOTH MOISTENED IN LEMON OIL POLISH OR LUKEWARM SOAP AND WATER, THEN BUFF WITH A DRY CLEAN CLOTH.