Keppel Swivel Barstool Brown

Item #: 109974

The Keppel barstool is a wonderfully versatile and modern piece that works in any kitchen or workspace with its sleek design and functionally swivel seating. It is durably constructed with quality vinyl and a sturdy powder coated steel frame. This piece brings glam and Art Deco design to any space.

Assembly required (Y or N) : Yes

Ships By : Ground

Product Details

Colors	: Brown
Leg Colors	: Black
Materials	: Faux Leather 100% Polyurethane, Plywood, Powder Coated Steel
Upholstery Materials	: Faux Leather
Product Types	: Barstool
styles	: Modern
Trend	: Modern
Assembly Required	: Yes
Stackable	: No
Weight Capacity (lbs.)	: 265
Adjustable Height	: No
Removable Cushion Cover	: No
Washable Removable Cover	: No
Swivel	: Yes
Wheels	: No
Ships By	: Ground
Country of Origin	: China
Item Status	: ACTIVE
UPC	: 842896173716

Product Dimensions

Product 1 (in)	: 19.7" W x 21.7" D x 41.7" H
Product 1 Weight (lbs.)	: 23.1
Seat (in)	: 19.7" SW x 17.7" SD x 30.3" SH

Packaging
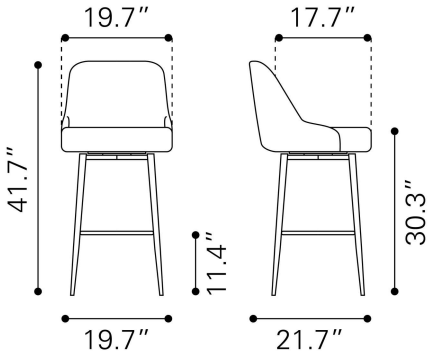
Total Net Weight (lbs.)	: 24
Display WeSupply Delivery Estimation	: 29
Display WeSupply Delivery Estimation	: 0.58
Display WeSupply Delivery Estimation	: 0.243
Display WeSupply Delivery Estimation	: 1
Carton 1 (in)	: 22 W x 34 L x 21 H
Carton 1 Weight (lbs.)	: 29