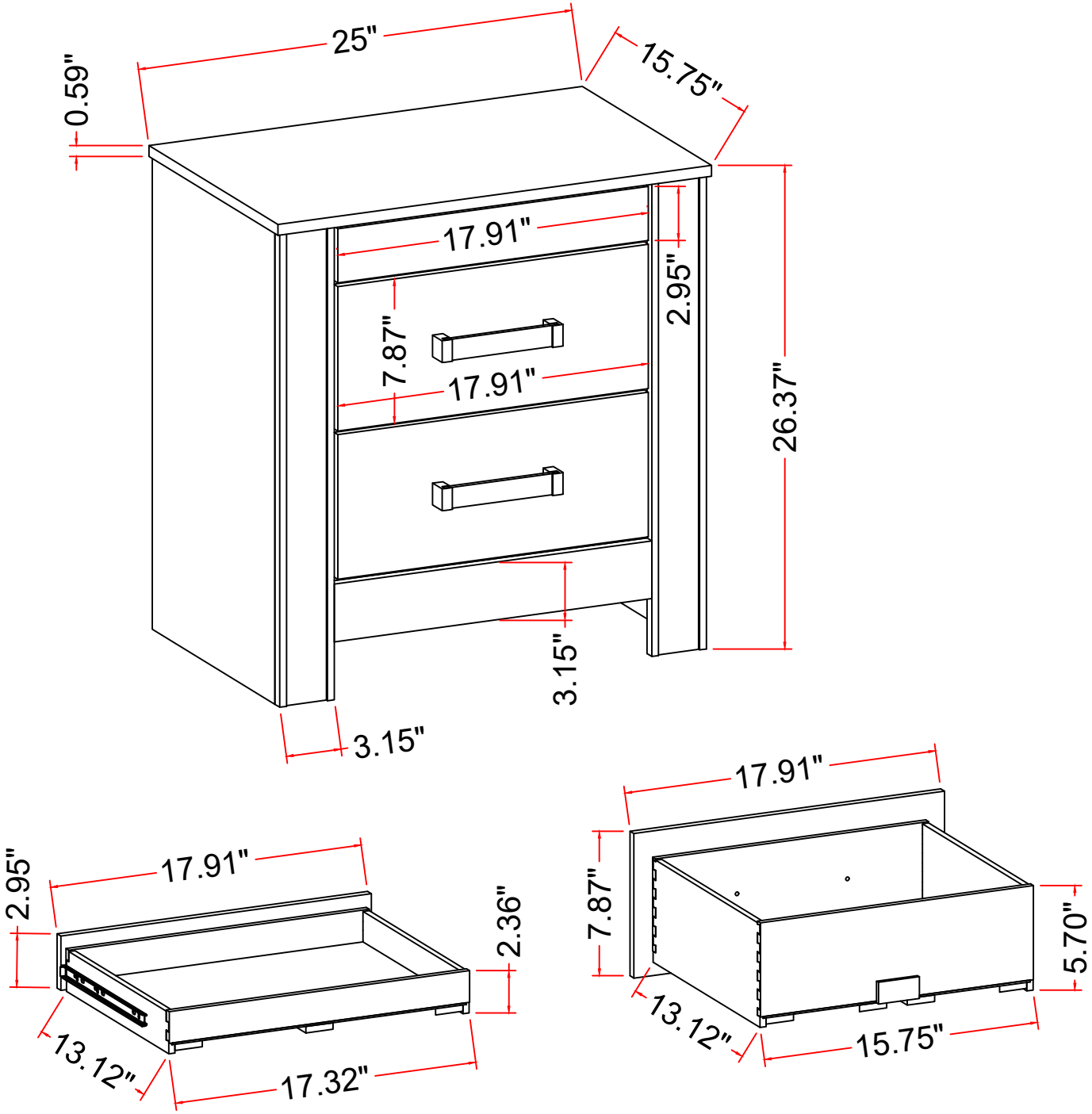
25"
15.75"
0.59"
17.91"
2.95"
7.87"
17.91"
26.37"
3.15"
3.15"
17.91"
7.87"
5.70"
13.12"
15.75"
2.95"
17.91"
2.36"
13.12"
17.32"

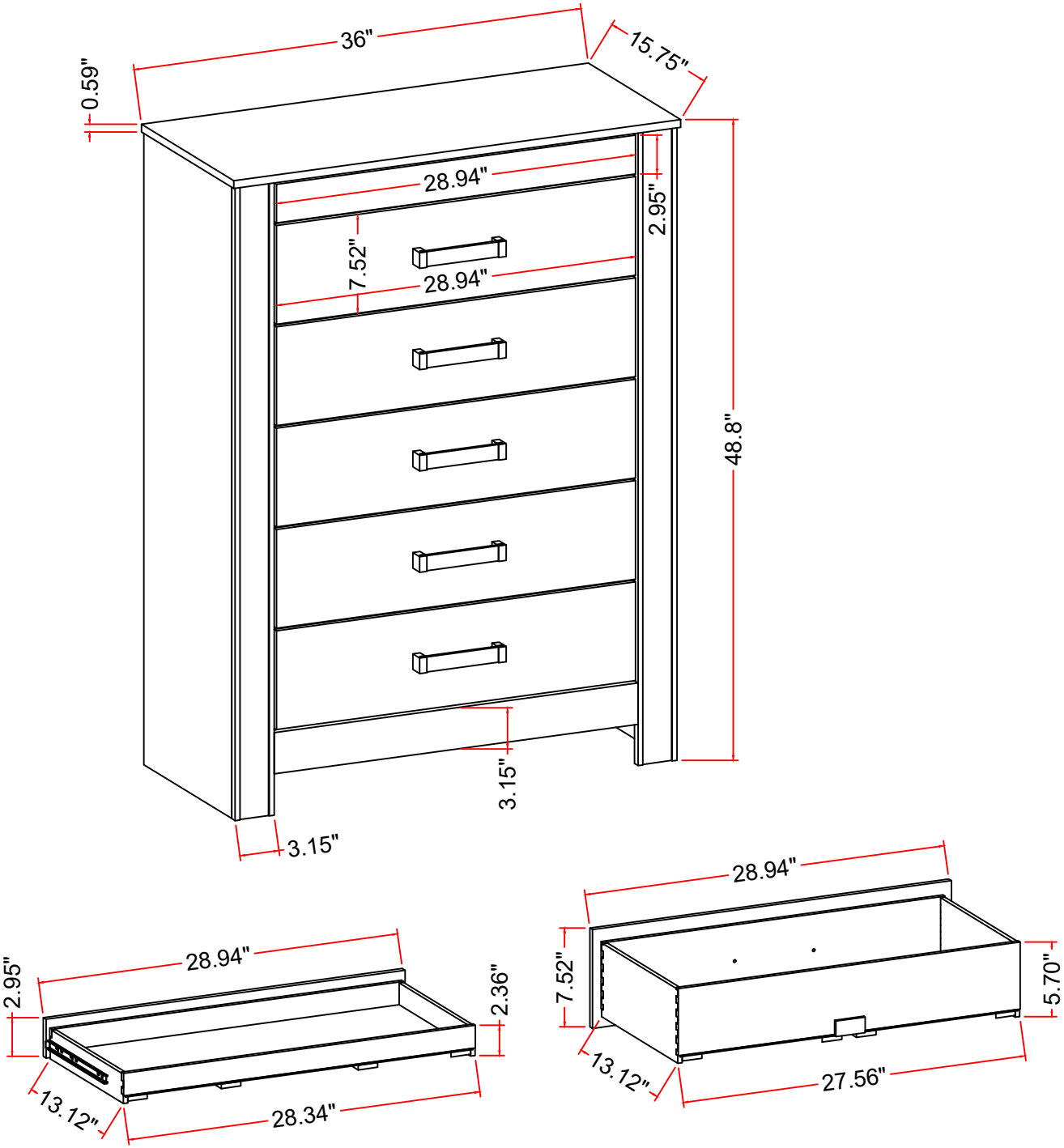
36"
15.75"
0.59"
28.94"
2.95"
7.52"
28.94"
48.8"
3.15"
3.15"
28.94"
2.95"
2.36"
13.12"
28.34"
28.94"
7.52"
5.70"
13.12"
27.56"

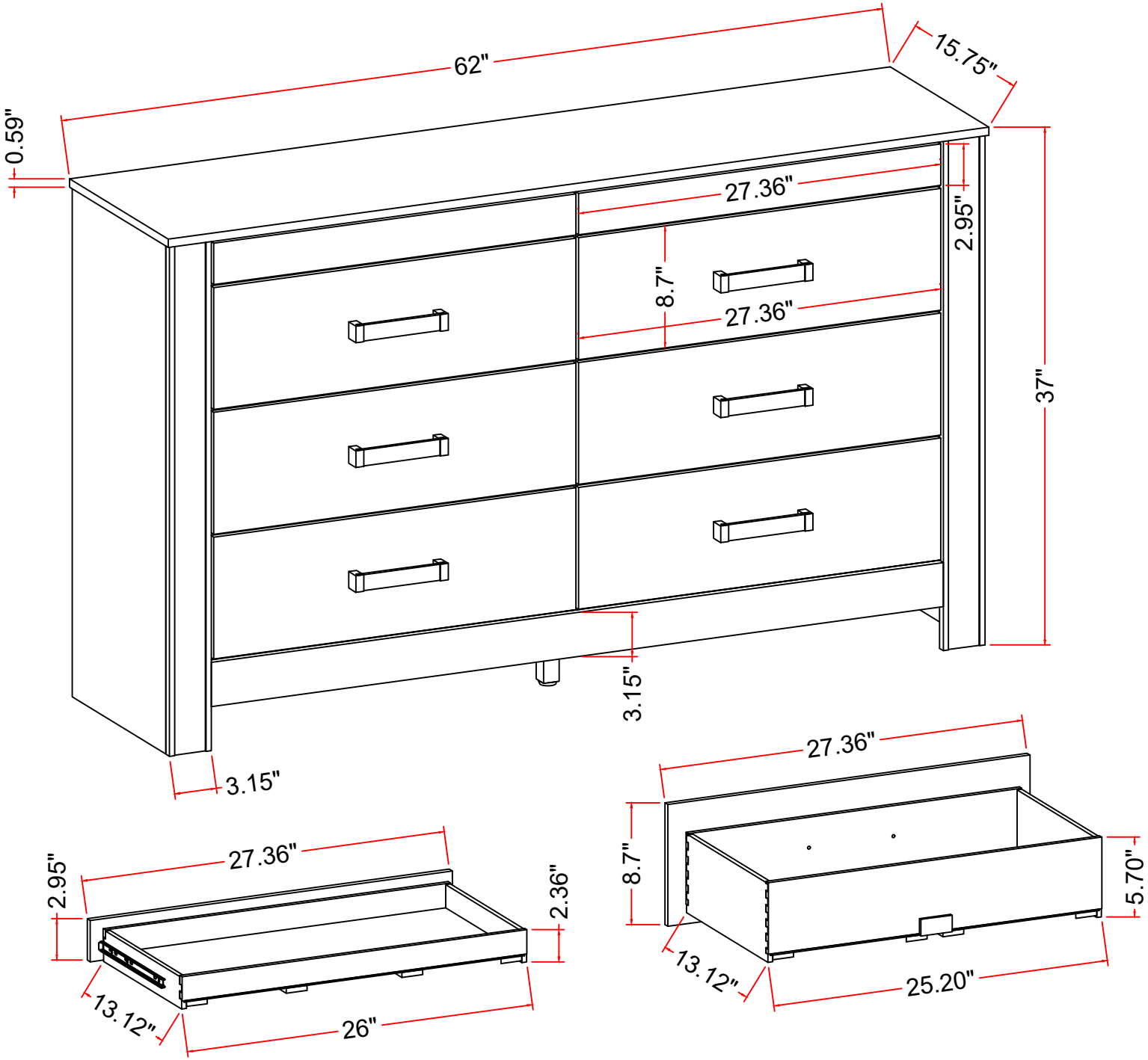
62"
15.75"
0.59"
27.36"
2.95"
8.7"
27.36"
37"
3.15"
3.15"
27.36"
8.7"
5.70"
13.12"
25.20"
27.36"
2.95"
2.36"
13.12"
26"

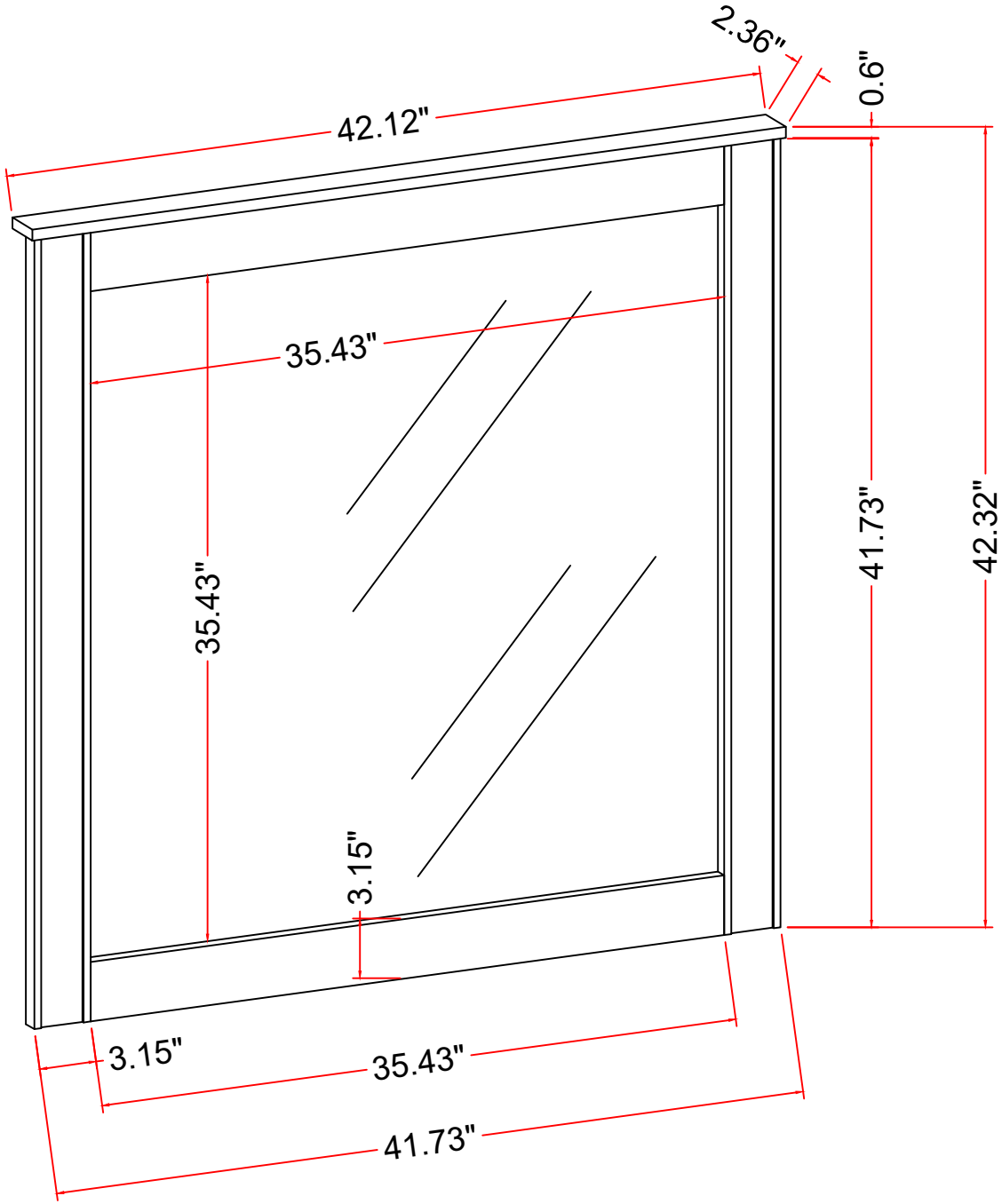
2.36"
0.6"
42.12"
35.43"
35.43"
41.73"
42.32"
3.15"
3.15"
35.43"
41.73"

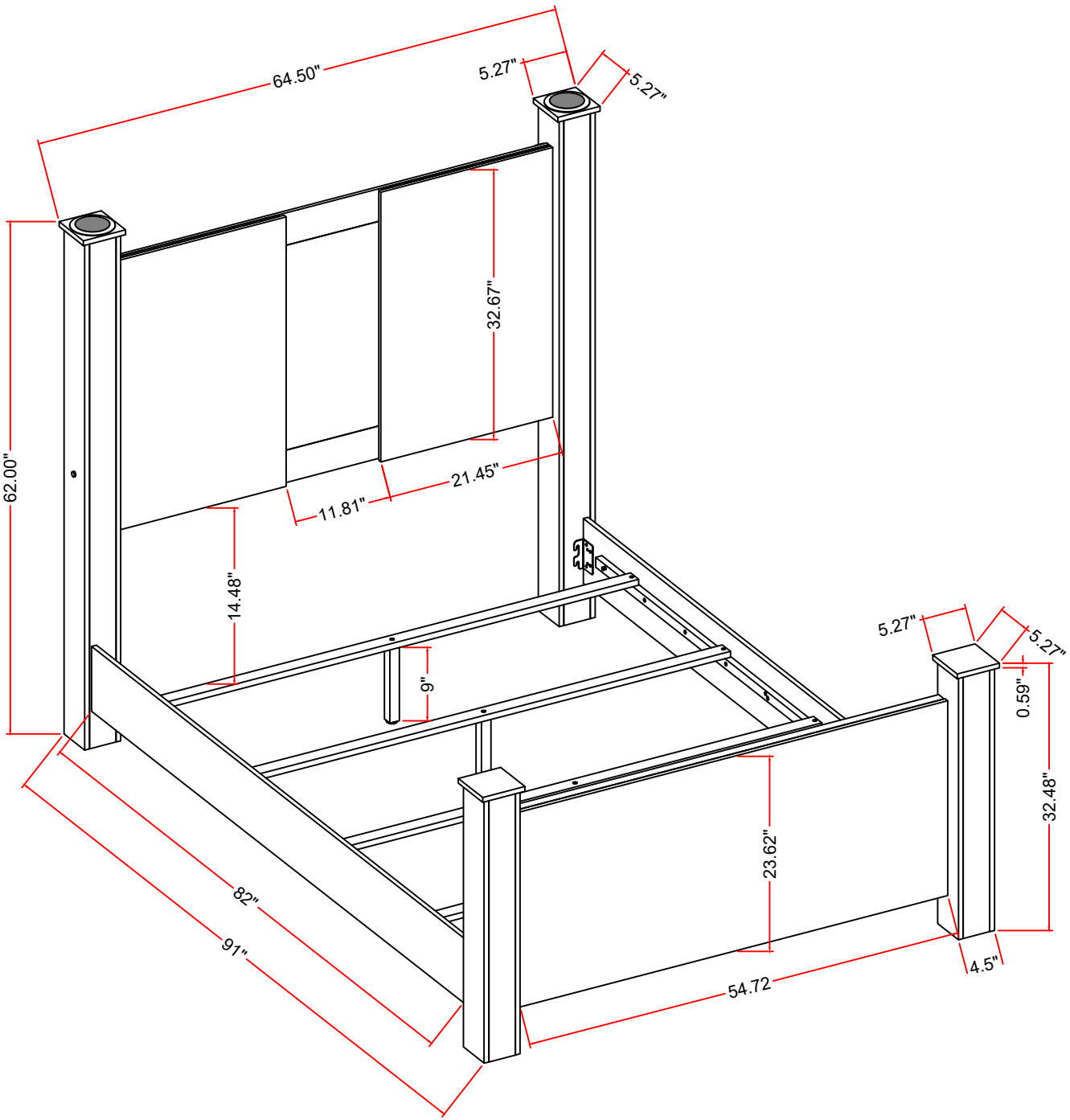
64.50"
5.27"
5.27"
32.67"
62.00"
21.45"
11.81"
14.48"
9"
5.27"
5.27"
0.59"
32.48"
23.62"
82"
91"
54.72
4.5"