# Product Assembly Instructions

## Item# : LCAISISAWA, LCAISICHWA, LCAISIOLWA & LCAISIPPWA - AMARIS DINING CHAIR

## Helpers needed to assemble: 2
## Estimate time frame to assemble: 10 minutes

Thank you for purchasing this quantity product. Be sure to check all packing material carefully for smalll parts, which may come loose inside the carton during shipment. Please identify and count all parts and compare with the HARDWARE LIST below.

Caution: Please read instructions carefully before unpacking assembly parts. Sharp, exposed staples can cause injury, therefore, for your protection, please remove any exposed staples used in packing.

*Keep the Allen Key and Tighten all screws each 3 months for safety concern!

1. We recommend to assemble this product with the assistance of another person. This will provide a smooth assembly process, and can help eliminate self injuries or damage to the product during assembly.
2. Please do not over tighten screws or bolts until the asssembly is completed.
3.Please put all parts on a smooth, flats surface before assembly, and carefully follow the assembly steps to assemble your newly purchased product correctly and efficiently.

| # | Part List | QTY |
|---|---|---|
| A | Left Chair Side Legs | 4 |
| B | Right Chair Side Legs | 4 |
| C | Long Stretcher | 4 |
| D | Centre Stretcher | 4 |
| E | Short Stretcher | 4 |
| F | Seat Cushion | 4 |
| G | Backrest Cushion | 4 |

| # | Hardware List | QTY |
|---|---|---|
| 1 | Jcbc Bolt M6 X 30mm | 16 |
| 2 | Jcbc Bolt M6 X 40mm | 16 |
| 3 | Spring Washer M6 | 16 |
| 4 | M8 X 30mm Wood Dowel | 16 |
| 5 | CSK Screw M4 X 32mm | 16 |
| 6 | Allen Key | 1 |
| 7 | Wood Button | 16 |

# Step 1:

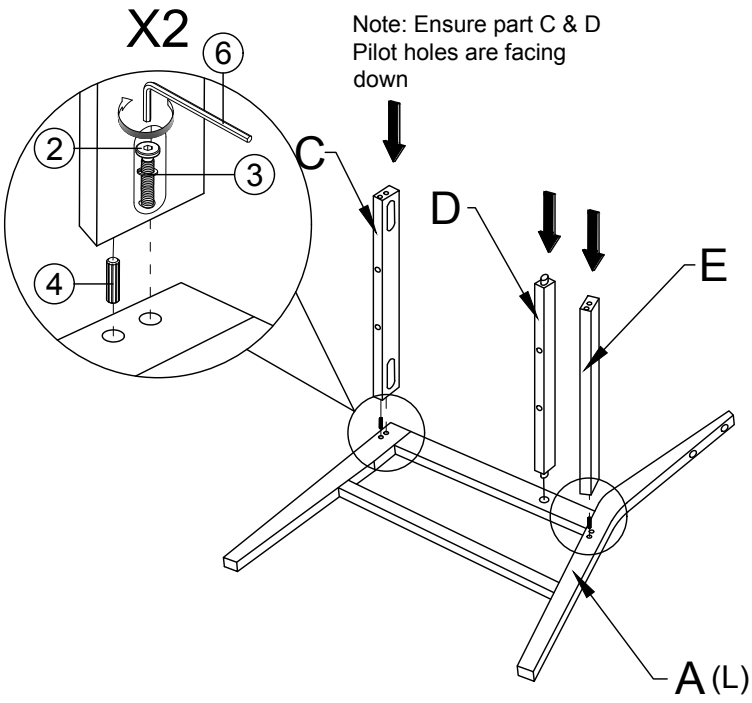


# Step 2:

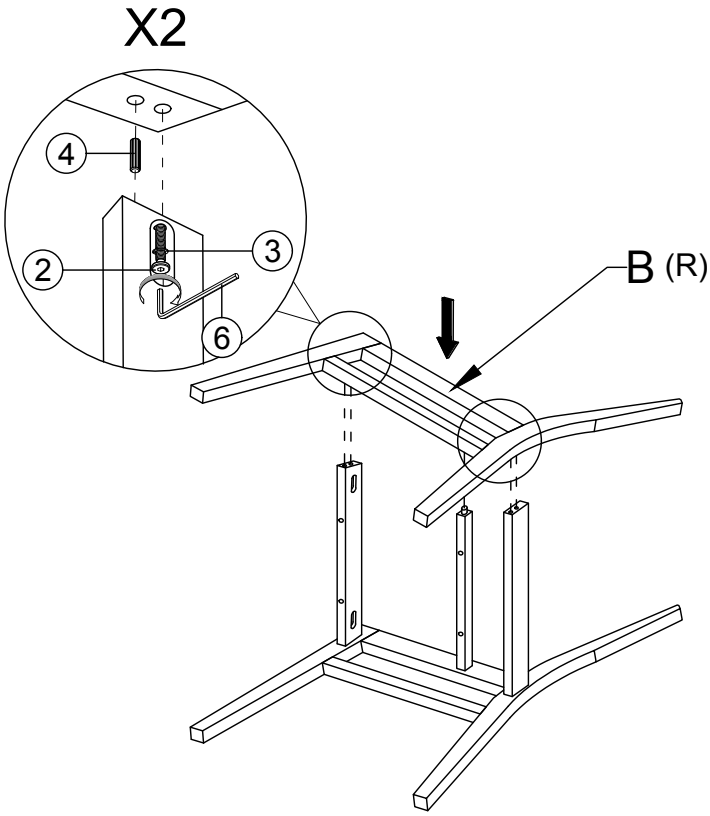

# Product Assembly Instructions

**Item# : LCAISISAWA, LCAISICHWA, LCAISIOLWA & LCAISIPPWA - AMARIS DINING CHAIR**

## Step 3:

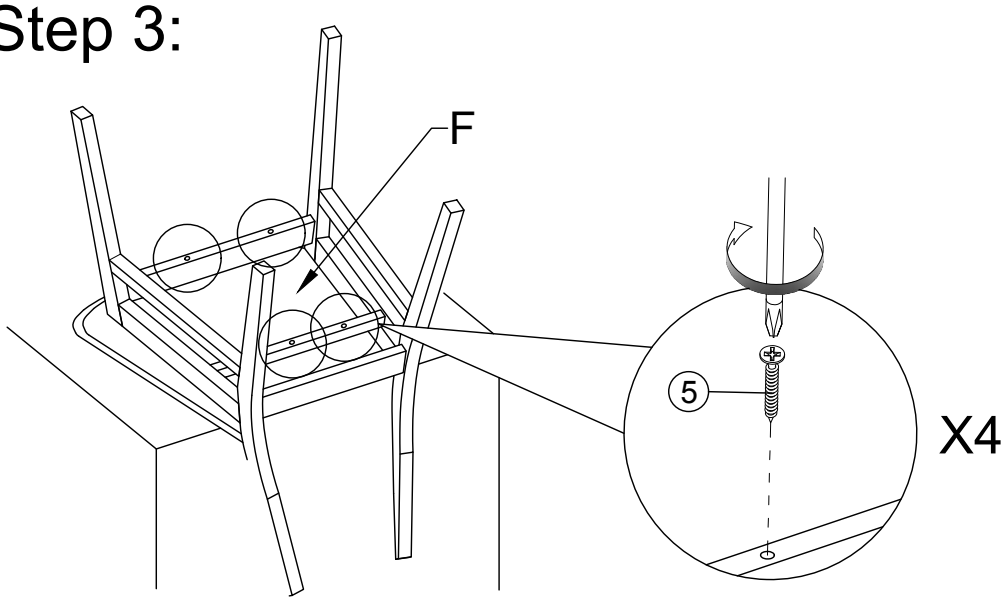


## Step 4:

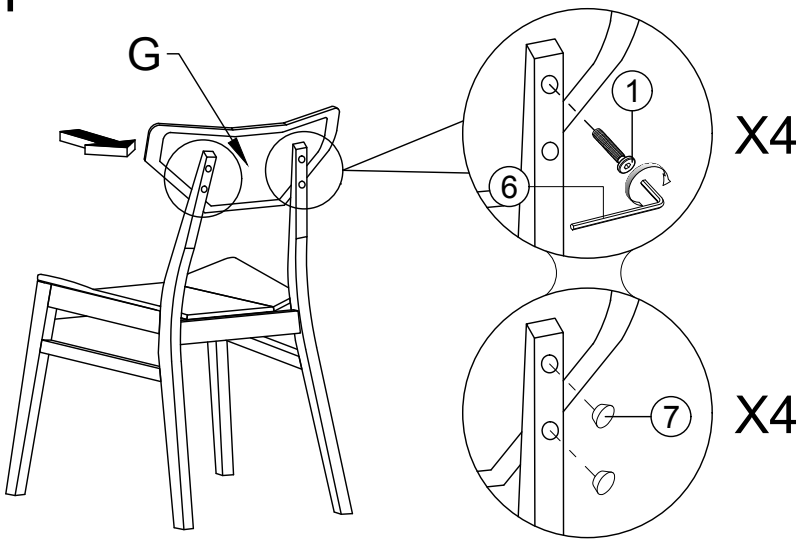


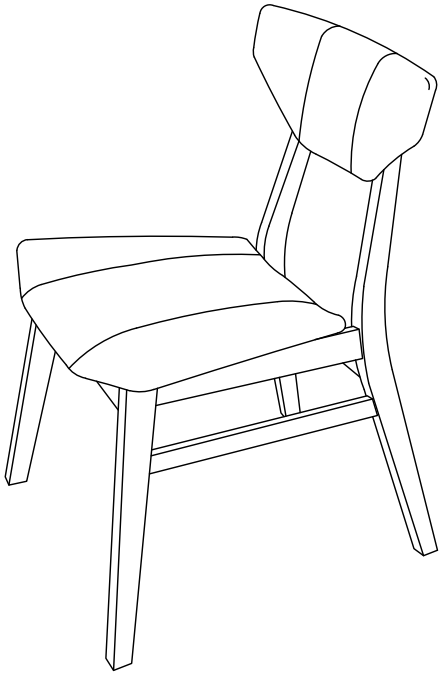

Version: 08-22-25