Brand	hansgrohe
Art. Name	**Clubmaster** Showerhead 3-Jet, 2.5 GPM
Art. Nr.	28496821
Surface	Brushed Nickel
Pos.	1

Product Picture

Drawing

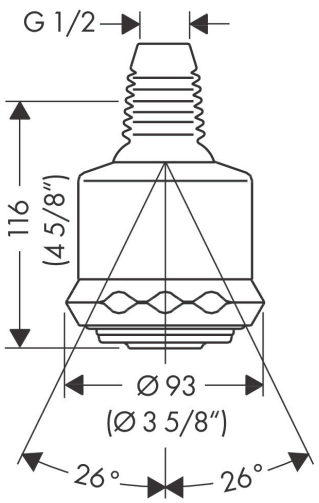

Features

- Spray pattern: Stream, Massage spray, Soft spray
- Maximum flow rate (at 3 bar): 9.5 l/min
- Adjustment with shift on overhead shower
- 72 no-clog spray nozzles
- Spray disc surface: grey

Technology

Spray Types