The information and designs contained in this drawings are confidential and the proprietary of SALAMANDER DESIGNS.
Neither this design or any information in this drawing may be reproduced or disclosed to others
without the express written consent of SALAMANDER DESIGNS.

Versie date : 7-11-2007

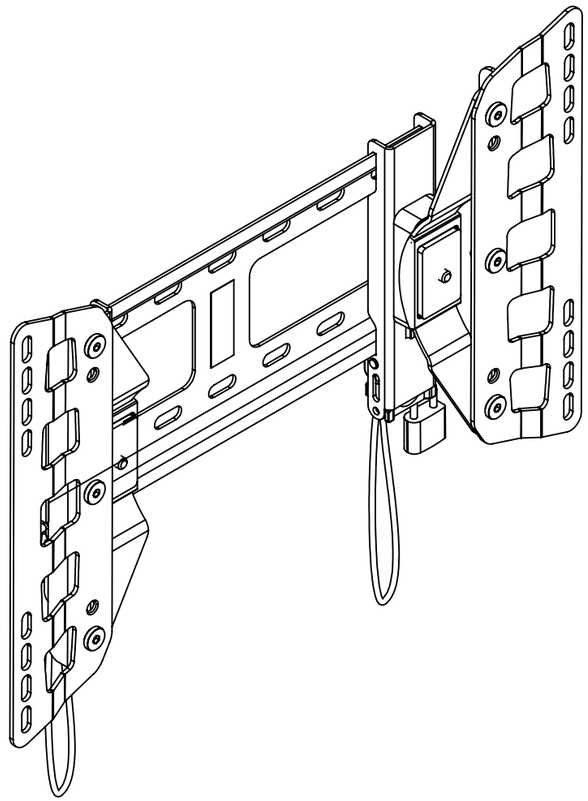

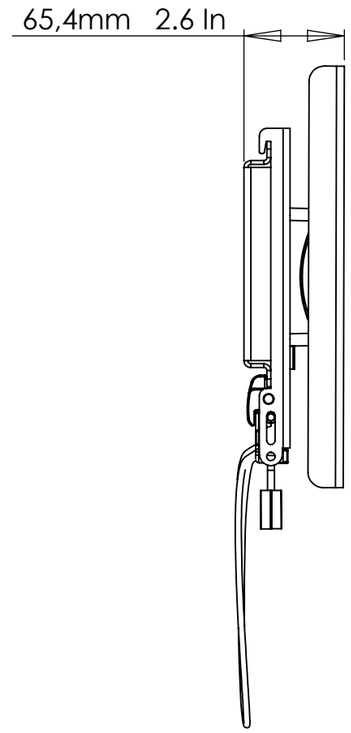

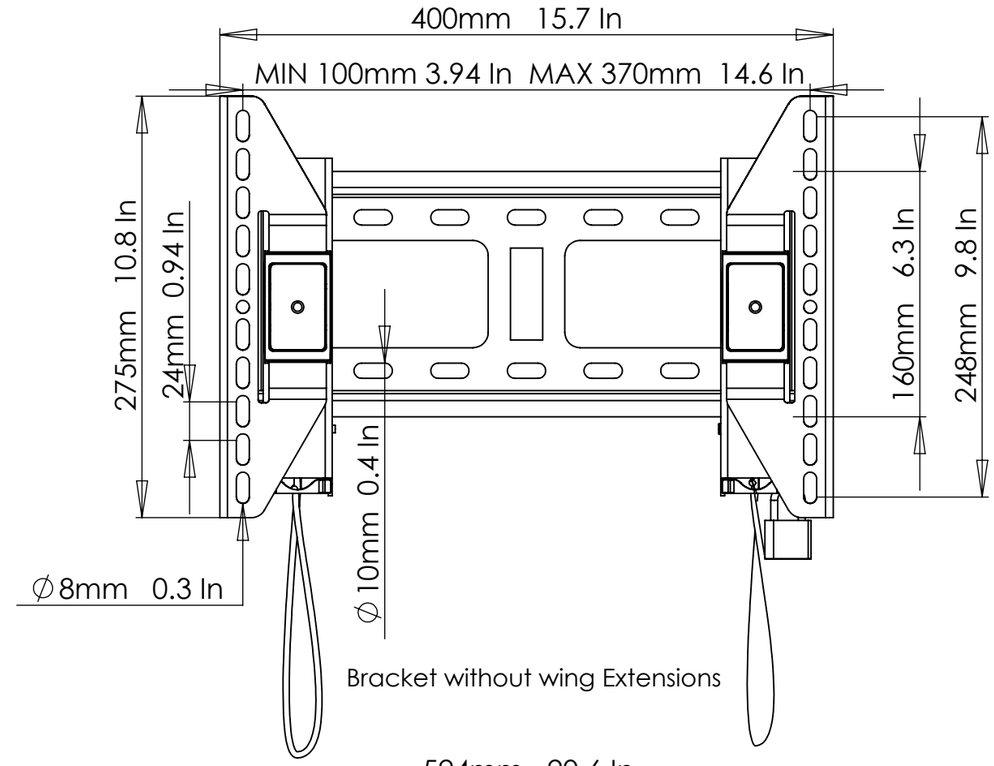

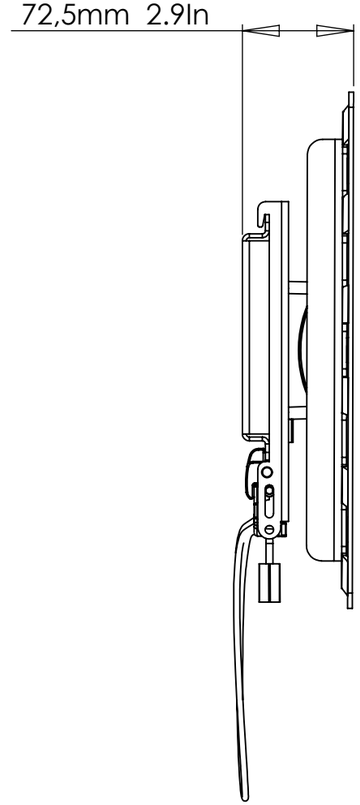

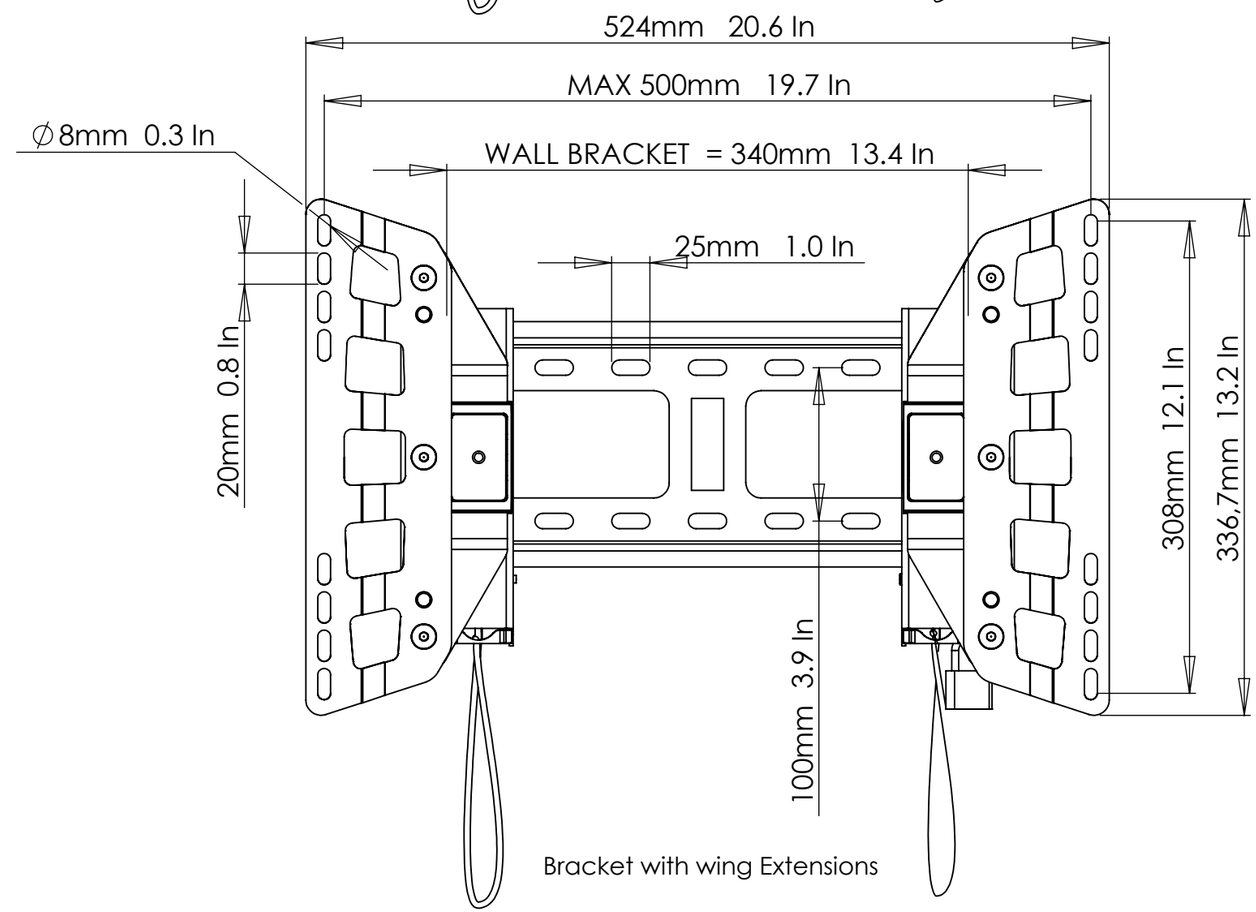

FLEXO MEDIUM

Mesurements in MM Inches