homestyles

88 5530 514

Queen Canopy Rails

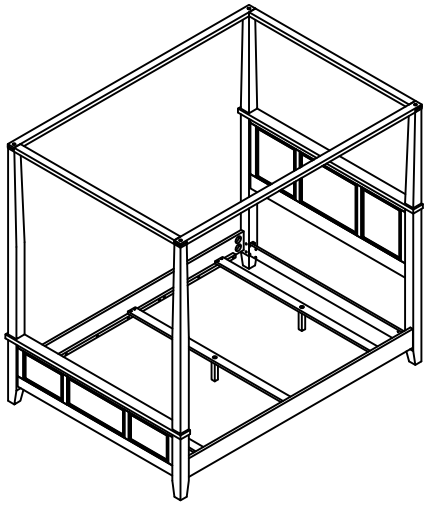

IMPORTANT

Carefully remove all the parts from the carton and place them individually on a soft cloth to prevent scratches or other damage.

Carefully and strictly follow these assembly instructions to ensure a completed product as designed.

Do not use power tools above 8 volts to assemble.

Part List

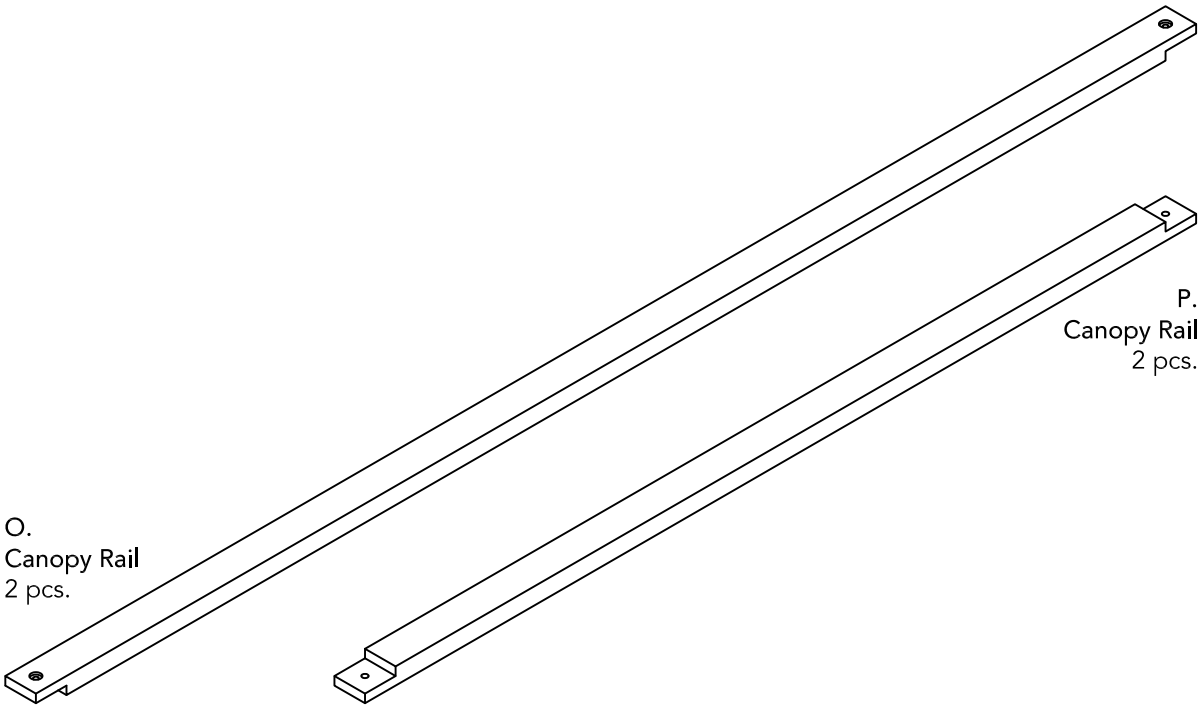

Hardware List

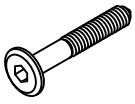

Head Cap Bolt (M6x50)
4 pcs. (+1 extra)

Flat Washer
4 pcs. (+1 extra)

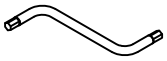

Key Wrench
1 pc.

Small Key Wrench
1 pc.

Cartons 88 5530 511, 512 and 513 are also needed for assembly.

Home Styles Customer Service: www.homestyles-furniture.com,
servicedesk@homestyles-furniture.com, 888-680-7460, 877-831-0319

CR. 5170 / 17 / 03

Assembly Instructions 2/2

IMPORTANT

- Use a soft cloth between these parts and the floor.
- Do not use power tools above 8 volts to assemble.
- Do not tighten all the screws until each part is properly assembled.
- Keep Key Wrench in a safe place as the Bolts may need to be tightened up in the future.

STEP 1

Attach Canopy Rails (O) and (P) to unit with Head Cap Bolts and Flat Washers.

Tighten Head Cap Bolts with Key Wrench. (See Figure 1)

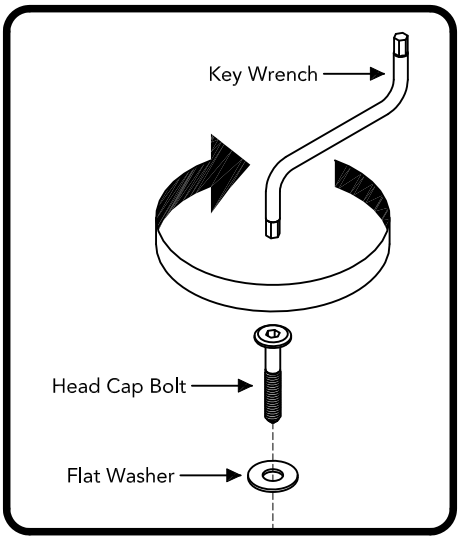

Figure 1

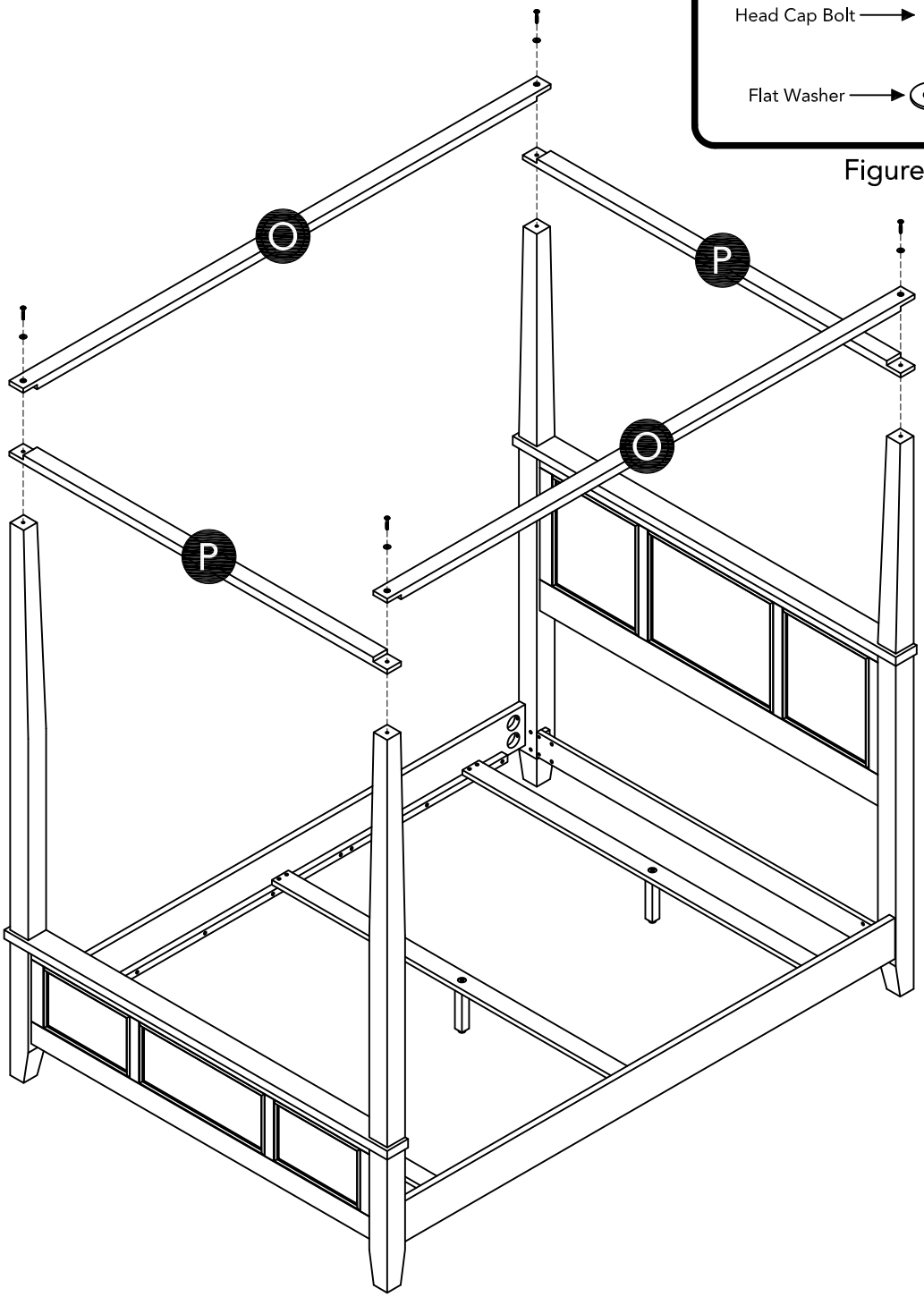

CARE INSTRUCTIONS

NEVER

allow liquids to remain on furniture. Absorption causes parts to warp and split and finishes to delaminate.

NEVER

use glass cleaners on finished furniture. Ammonia chemically attacks the finish.

Do not use power tools above 8 volts to assemble.

PREVENT CRACKING

Do not place in direct sunlight.

PREVENT FADING

Do not write directly on surface.

PREVENT MARKING

Do not place hot objects on surface.

PREVENT FINISH DAMAGE

Do not use rubber based placemats.

PREVENT DISCOLORING

Do not use commercial waxes and polishes.

PREVENT YELLOWING

CLEAN

with a soft cloth moistened in lukewarm soap and water. Buff with a dry clean cloth.

Home Styles will provide replacements free of charge for missing or damaged hardware or parts within 30 days of purchase. Digital images of the defective parts may be required. If the product was not purchased from an authorized retail affiliate, Home Styles is under no obligation to provide replacement parts. Parts are not available for fully assembled items nor are parts available for sale. Replacements for missing or damaged hardware or parts may be requested at: www.homestyles-furniture.com/customer-service/replacement-parts

Home Styles Customer Service: www.homestyles-furniture.com, servicedesk@homestyles-furniture.com, 888-680-7460, 877-831-0319