FANBACK ADIRONDACK CHAIR

AD-0101

BREEZESTA tm

Recycled Poly Furniture

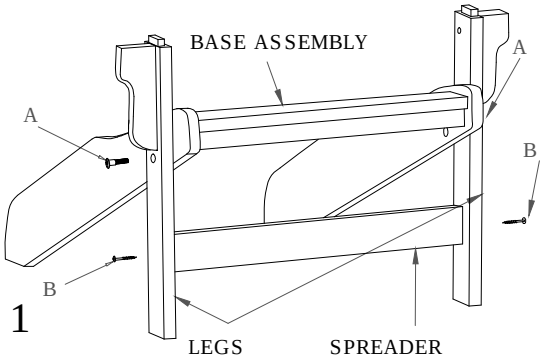

STEP 1

Attached spreader to legs with screws (B) as shown. Bolt legs to base assembly using bolts (A).

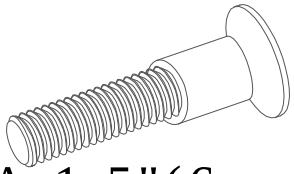

A-1.5"(6 pcs.)

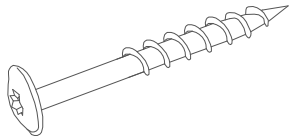

B-1.5"(6 pcs.)painted

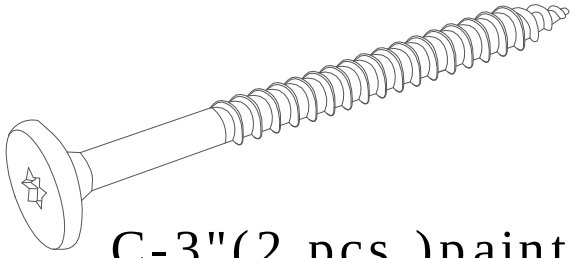

C-3"(2 pcs.)painted

LIST OF PARTS
Back Assembly (1)
Base Assembly (1)
Legs (2)
Spreader (1)
Arms (1R) (1L)
Chair Bolts "A" (6)
Colored Screws "B" (6)
Colored Screws "C" (2)
Insert Bit Tool (1)

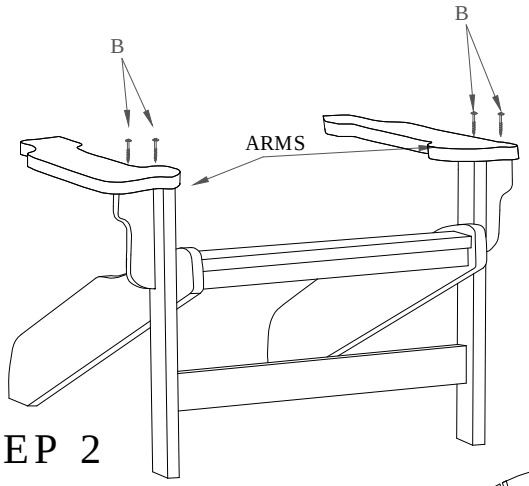

STEP 2

Fit arms on top of legs and attached with screws (B) through top as shown.

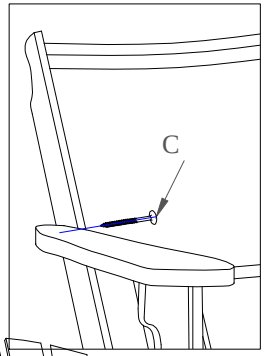

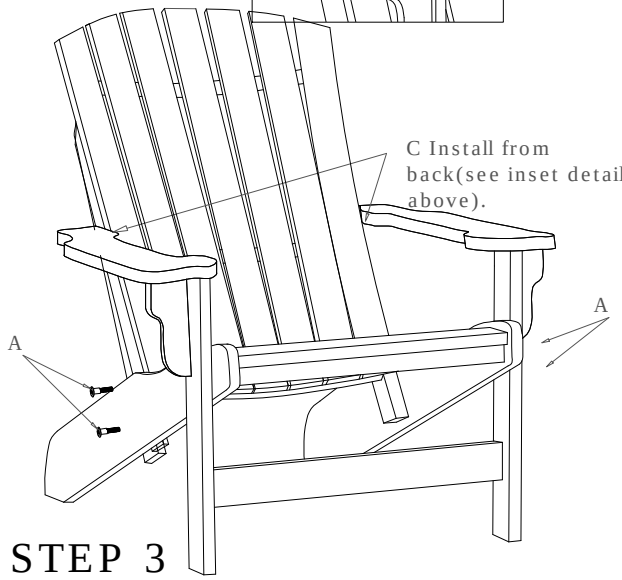

STEP 3

Bolt back assembly to base assembly using 2 bolts (A) on each side as shown. Attach arm to seat back using Large Head Screws (C).

Ver 13.0

A