1810268

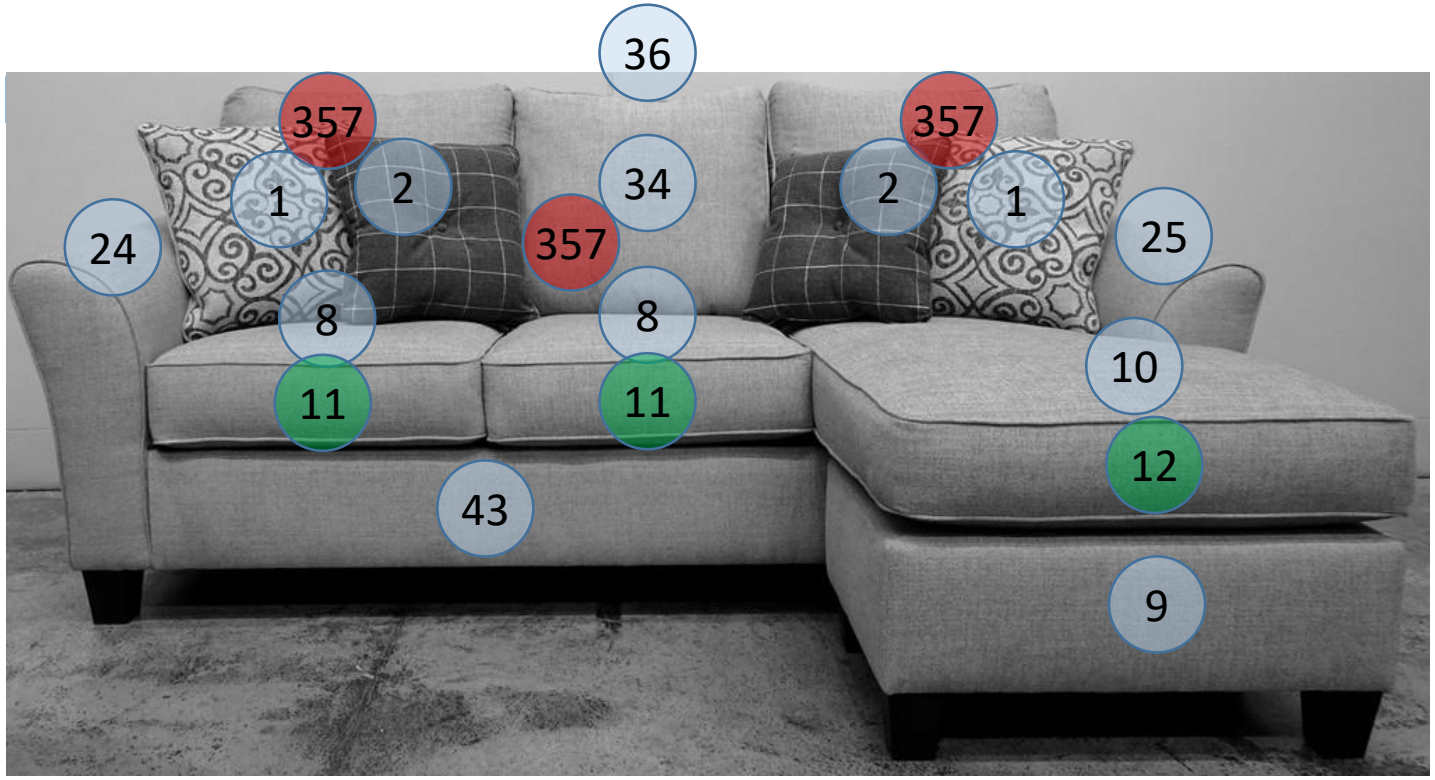

Call Out	Description
	Blown Fiber
	Cushion Chaise Pad - top Pad
	Cushion Foam
	KD Component
	Cover

For more RPs' information, please see the following page.

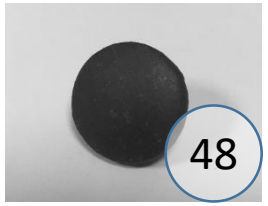
48

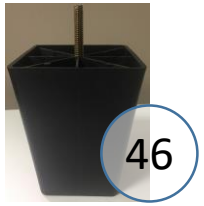
46

417

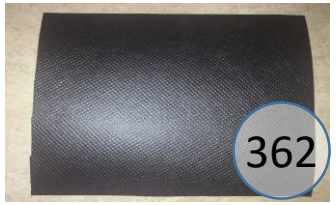
362

472

355

227

562

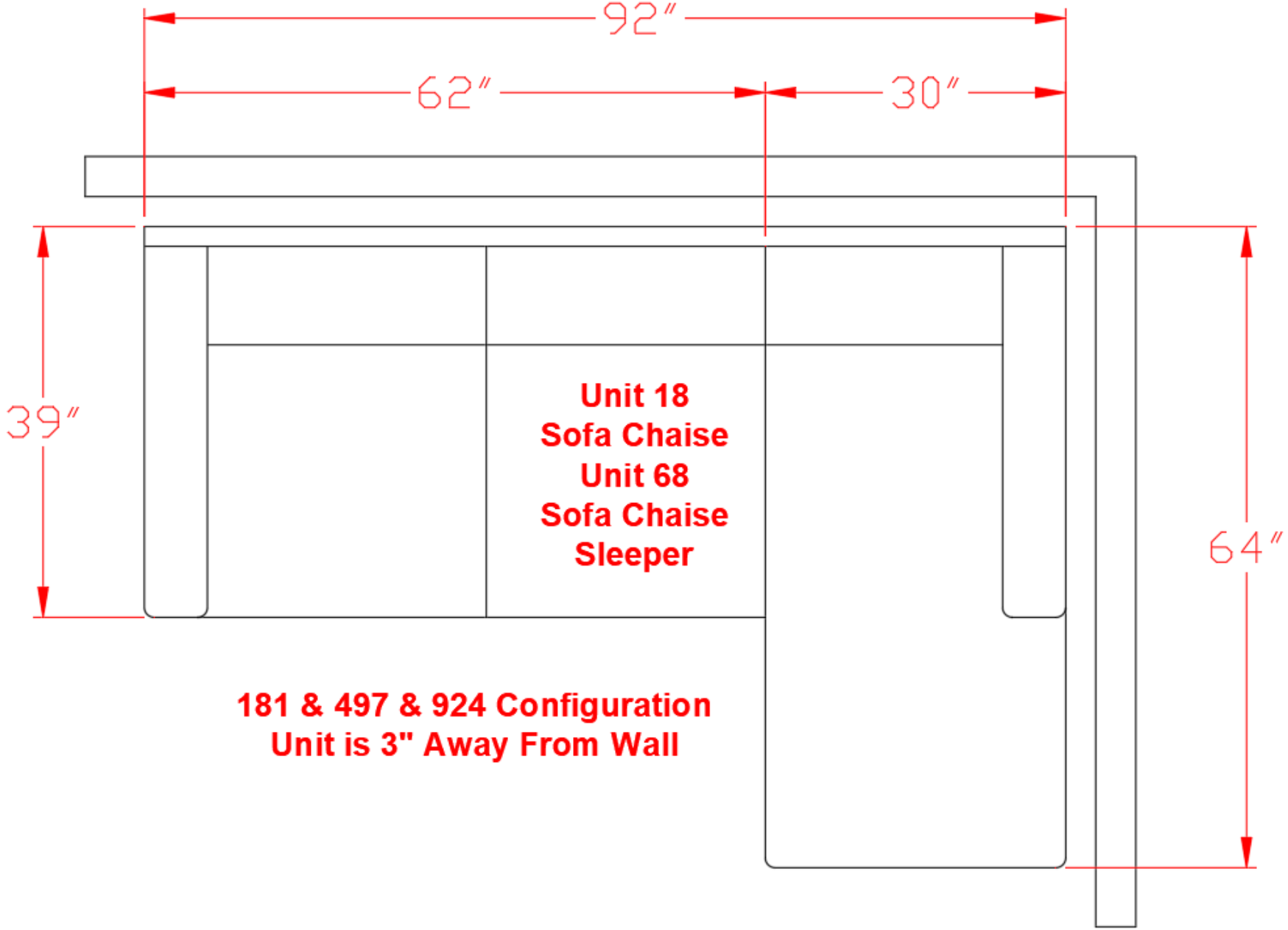

181 & 497 & 924 Configuration
Unit is 3" Away From Wall