EXPLORE HOME™ UNIVERSAL

INSTRUCTION SHEET

U301635
U301A635

COALESCE ARM CHAIR

Thank you for purchasing this quality product. Be sure to check all packing material carefully for small parts that may have come loose inside the carton during shipment.

Caution: (1) These parts are cumbersome and heavy. This product can best be assembled with the assistance of one or more persons in order to prevent personal injury and to insure parts are not damaged during the assembly process. If dirty, clean finished parts with mild dishwashing liquid and water solution applied on a damp cloth. The cloth should not be excessively wet. Polish finish with a soft cloth and an industry recognized furniture polish.

(2) To prevent damage to your floor or carpet, please check the bottom of each piece of furniture for stain residue and rough surfaces and also check for staples or nails left after removing the packaging material. The manufacturer will not be held responsible if preventative steps are not taken prior to installation.

(3) Unpack and dispose of all packing material but be careful not to throw away any assembly parts or hardware. Read the instruction sheet and parts list carefully. Remove all staples and screws used for packaging carefully using pliers and (or) screwdrivers to prevent injury and scratching or damaging flooring.

(4) During normal use everyday, screws, bolts, nuts and wooden plugs may loosen up. They should be periodically inspected and re-tightened to prevent damage to the furniture and (or) personal property or cause injury. Always check to be sure all hardware on this list and the above mentioned components is attached to the furniture properly and kept tightened at all times.

PARTS LIST:

	Description	Qty.		Description	Qty.
A	Chair Back	1pc	**B**	Chair Seat	1pc
C	Arm and Front Legs	2pcs	**D**	Stretcher	2pcs

Assembly Procedure: (Please follow the sketches below.)

Unpack, inspect, assembly instruction carefully. Lay out the parts and hardware. Make sure the quantity of each is correct.

Step 1: Assemble Chair Back (A) to Chair Seat (B) by using Bolt (3), Spring Washer (5) and Flat Washer (6). Tighten with Wrench (7).

Step 2: Assemble Chair Seat (B) to Chair Back (A) by using Bolt (4), Spring Washer (5), and Flat Washer (6). Tighten with Wrench (7). Assemble Stretcher (D) to back legs by using Screw (1). Tighten screws with screwdriver (Not provided).

Step 3: Assemble Arm and Front Legs (C) to Chair Seat (B) by using Bolt (2), Spring Washer (5) and Flat Washer (6). Tighten with Wrench (7). Assemble Stretcher (D) to front legs using Screws (1). Assemble Arm and Front Legs (C) to Chair Back (A) by using Screws (1).Tighten screws with screwdriver (Not provided).

Assembly is now complete.

EXPLORE HOME™ UNIVERSAL

INSTRUCTION SHEET

U301635
U301A635

COALESCE ARM CHAIR

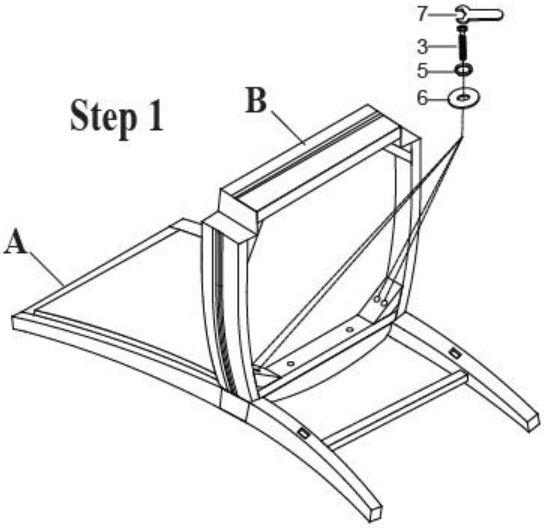
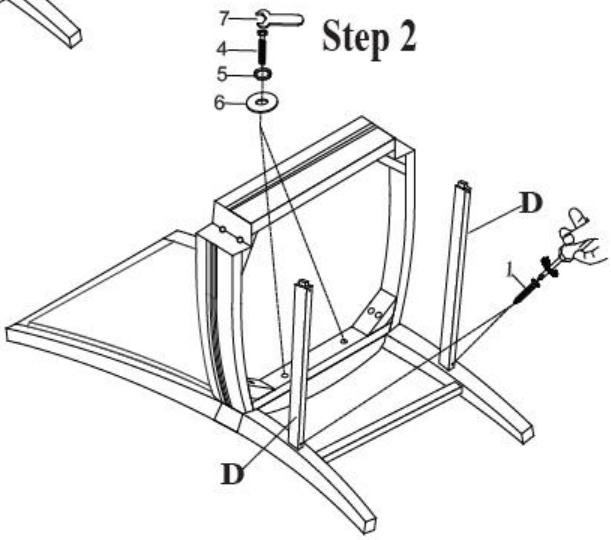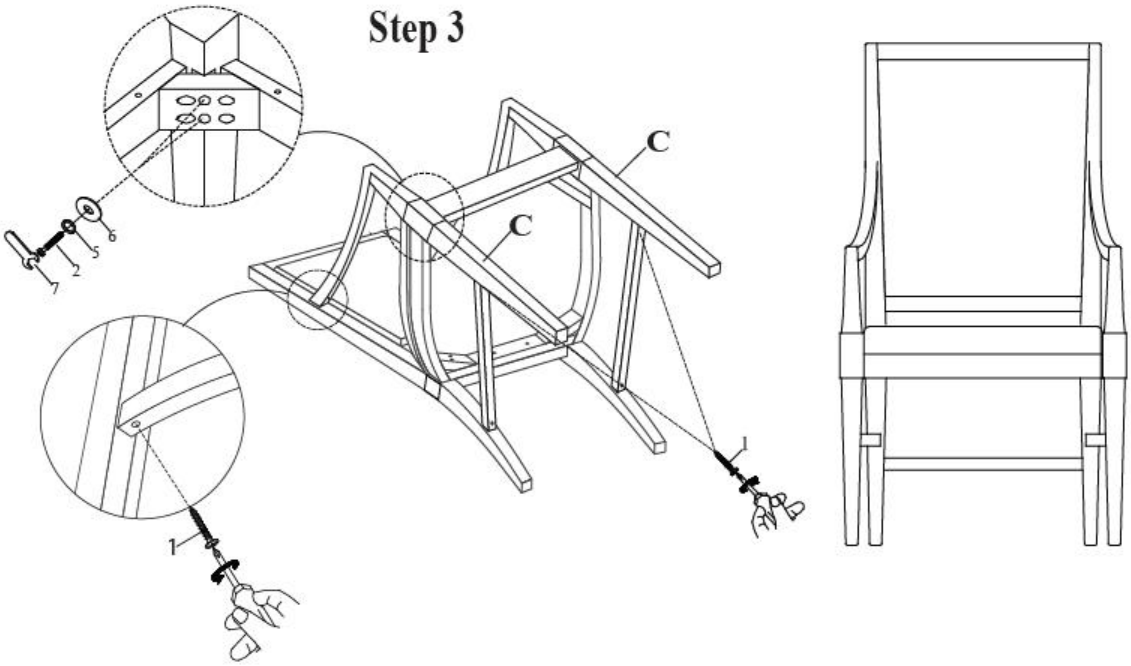
	HARDWARE LIST		Q'TY
1	SCREW	#8 x 38mm	4 PCS
2	HEX HEAD BOLT	Ø5/16" x 2"	4 PCS
3	HEX HEAD BOLT	Ø5/16" x 3"	4 PCS
4	HEX HEAD BOLT	Ø5/16" x 1"-1/2	2 PCS
5	SPRING WASHER	Ø5/16" x Ø12 x 1.5mm	10PCS
6	FLAT WASHER	Ø5/16" x Ø19 x 1.5mm	10PCS
7	WRENCH	12mm	1PC