3.6 horizontal termination

$(H_T) \leq (V_T)$

Simple venting configuration (only one 90° elbow)

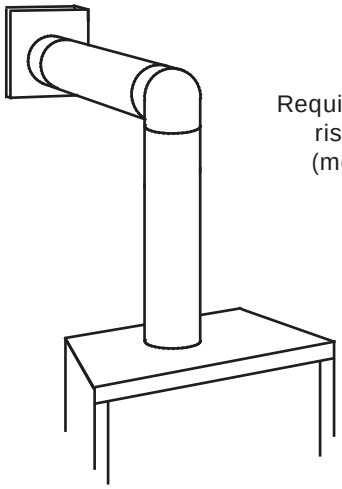

See graph to determine the required vertical rise V_T for the required horizontal run H_T.

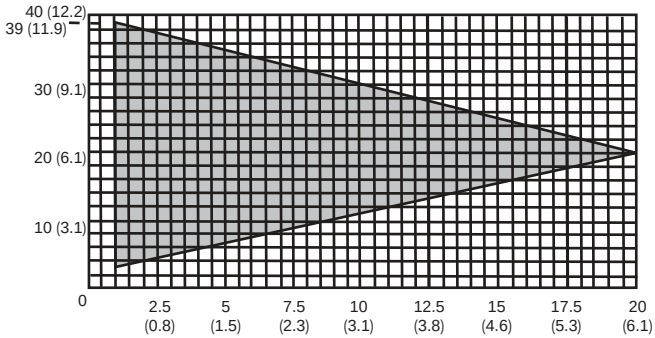

The shaded area within the lines represents acceptable values for H_T and V_T

For vent configurations requiring more than one 90° elbow, the following formulas apply:

Formula 1: $H_T \leq V_T$
Formula 2: $H_T + V_T \leq$ 40 feet (12.2m)

Example:

V_1 = 3 ft (0.9m)
V_2 = 8 ft (2.4m)
$V_T = V_1 + V_2$ = 3 ft (0.9m) + 8 ft (2.4m) = 11 ft (3.4m)
H_1 = 2.5 ft (0.8m)
H_2 = 2 ft (0.6m)
$H_R = H_1 + H_2$ = 2.5ft (0.8m) + 2 ft (0.6m) = 4.5 ft (1.4m)
H_O = .03 (two 90° elbows - 90°) = .03 (180° - 90°) = 5.4 ft (1.7m)
$H_T = H_R + H_O$ = 4.5 ft (1.4m) + 5.4 ft (1.6m) = 9.9 ft (3m)
$H_T + V_T$ = 9.9 ft (3m) + 11 ft (3.4m) = 20.9 ft (6.4m)

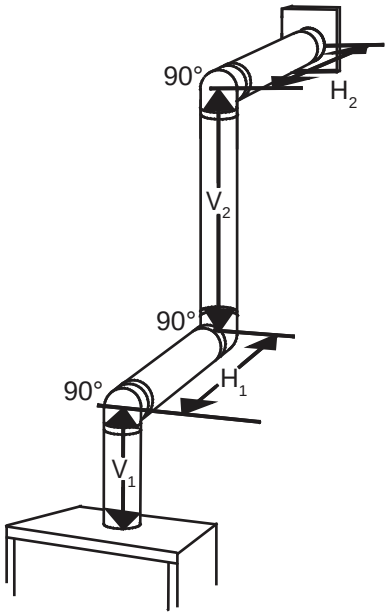

Formula 1: $H_T \leq V_T$
9.9 ft (3m) $\leq$ 11 ft (3.4m)
Formula 2: $H_T + V_T \leq$ 40 ft (12.2m)
20.9 ft (6.4m) $\leq$ 40 ft (12.2m)
Since both formulas are met, this vent configuration is acceptable.

$(H_T) > (V_T)$

Simple venting configuration (only one 90° elbow)

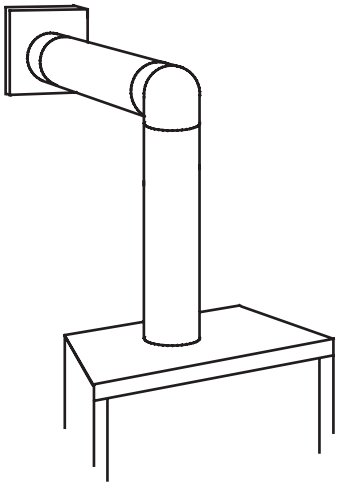

See graph to determine the required vertical rise V_T for the required horizontal run H_T.

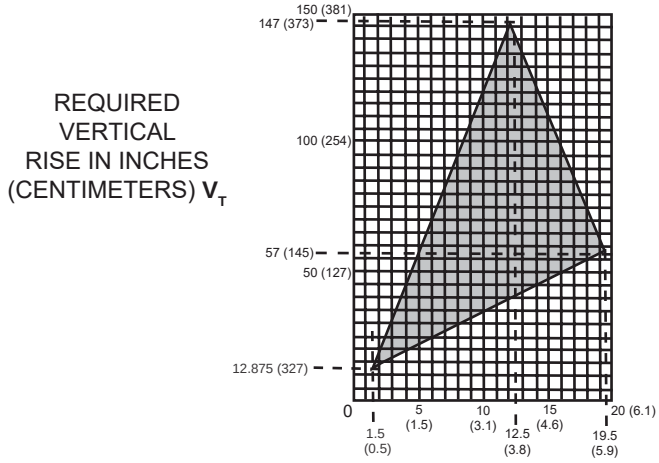

The shaded area within the lines represents acceptable values for H_T and V_T

For vent configurations requiring more than one 90° elbow, the following formulas apply:

Formula 1: $H_T \leq 4.2\ V_T$
Formula 2: $H_T + V_T \leq 24.75$ feet (7.5m)

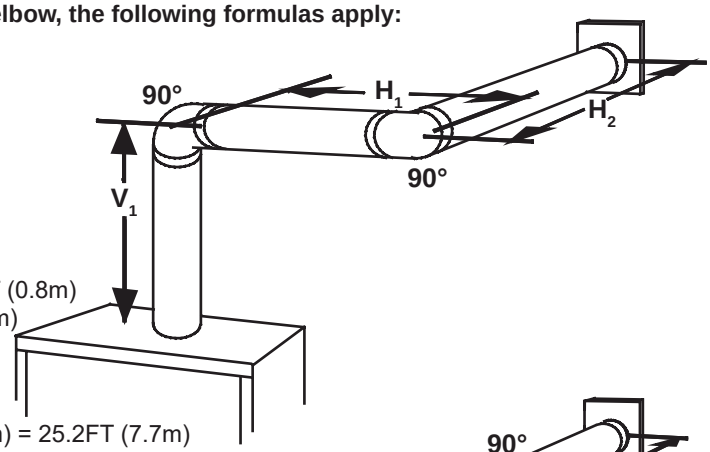

Example:
$V_1 = V_T$ = 6 FT (1.8m)
H_1 = 3 FT (0.9m)
H_2 = 5 FT (1.5m)
$H_R = H_1 + H_2$ = 3FT (0.9m) + 5FT (1.5m) = 8FT (2.4m)
H_O = .03 (two 90° elbows - 90°) = .03 (180° - 90°) = 2.7FT (0.8m)
$H_T = H_R + H_O$ = 8FT (2.4m) + 2.7FT (0.8m) = 10.7FT (3.3m)
$H_T + V_T$ = 10.7FT (3.3m) + 6FT (1.8m) = 16.7FT (5.1m)

Formula 1: $H_T \leq 4.2\ V_T$
$4.2\ V_T$ = 4.2FT (1.3m) x 6FT (1.8m) = 25.2FT (7.7m)
Formula 2: **$H_T + V_T \leq$ 24.75 FT (7.5m)**
16.7 FT (5.1m) $\leq$ 24.75 FT (7.5m)
Since both formulas are met, this vent configuration is acceptable.

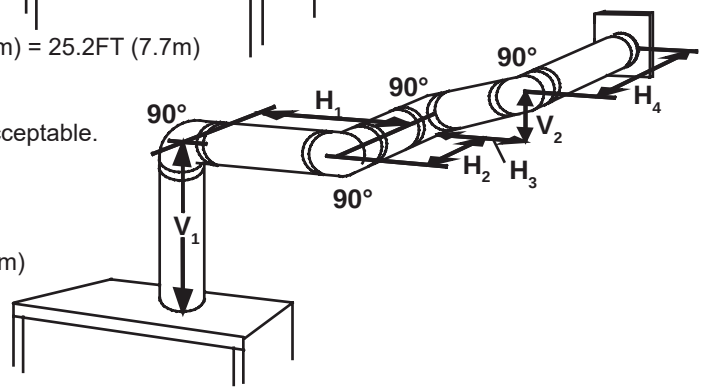

Example:
V_1 = 4 FT (1.2m)
V_2 = 1.5 FT (0.5m)
$V_T = V_1 + V_2$ = 4 FT (1.2m) + 1.5 FT (0.5m) = 5.5 FT (1.7m)
H_1 = 2 FT (0.6m)
H_2 = 1 FT (0.3m)
H_3 = 1 FT (0.3m)
H_4 = 1.5 FT (0.5m)
$H_R = H_1 + H_2 + H_3 + H_4$ = 2FT (0.6m) + 1FT (0.3m) + 1FT (0.3m) + 1.5FT (0.5m) = 5.5 FT (1.7m)
H_O = .03 (four 90° elbows - 90°) = .03 (360° - 90°) = 8.1 FT (2.5m)
$H_T = H_R + H_O$ = 5.5 FT (1.7m) + 8.1 FT (2.5m) = 13.6 FT (4.2m)
$H_T + V_T$ = 13.6 FT (4.2m) + 5.5 FT (1.7m) = 19.1 FT (5.8m)

Formula 1: $H_T \leq 4.2\ V_T$
$4.2\ V_T$ = 4.2 FT (1.3m) x 5.5 FT (1.7m) = 23.1 FT (7m)
13.6 FT (4.2m) $\leq$ 23.1 FT (7m)
Formula 2: **$H_T + V_T \leq$ 24.75 FT (7.5m)**
19.1 FT (5.8m) $\leq$ 24.75 FT (7.5m)
Since both formulas are met, this vent configuration is acceptable.

3.7 vertical termination

$(H_T) \leq (V_T)$

Simple venting configurations.

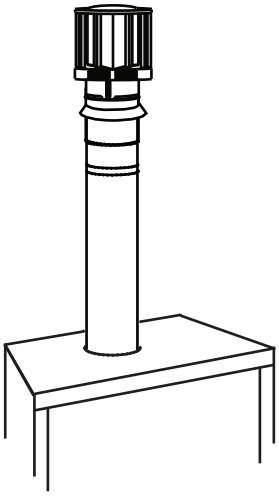

See graph to determine the required vertical rise V_T for the required horizontal run H_T.

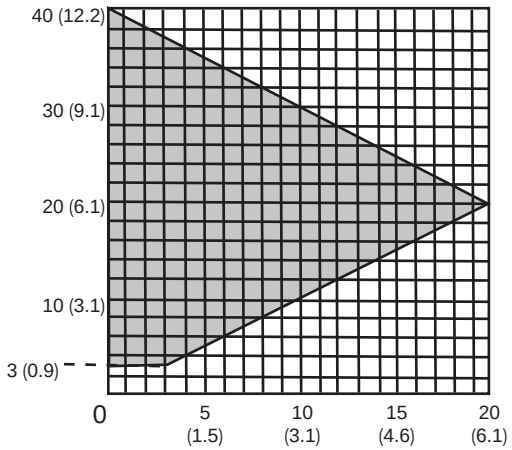

The shaded area within the lines represents acceptable values for H_T and V_T

For vent configurations requiring one or more 90° elbows the following formulas apply:

Formula 1: $H_T \leq V_T$
Formula 2: $H_T + V_T \leq 40$ feet (12.2m)

Example:
V_1 = 5 ft (1.5m)
V_2 = 6 ft (1.8m)
V_3 = 10 ft (3.1m)
$V_T = V_1 + V_2 + V_3$ = 5 ft (1.5m) + 6 ft (1.8m) + 10 ft (3.1m) = 21 ft (6.4m)
H_1 = 8 ft (2.4m)
H_2 = 2.5 ft (0.8m)
$H_R = H_1 + H_2$ = 8 ft (2.4m) + 2.5 ft (0.8m) = 10.5 ft (3.2m)
H_O = .03 (four 90° elbows - 90°)
= .03 (360° - 90°) = 8.1 ft (2.5m)
$H_T = H_R + H_O$ = 10.5 ft (3.2m) + 8.1 ft (2.5m) = 18.6 ft (5.7m)
$H_T + V_T$ = 18.6 ft (5.7m) + 21 ft (6.4m) = 39.6 ft (12.1m)

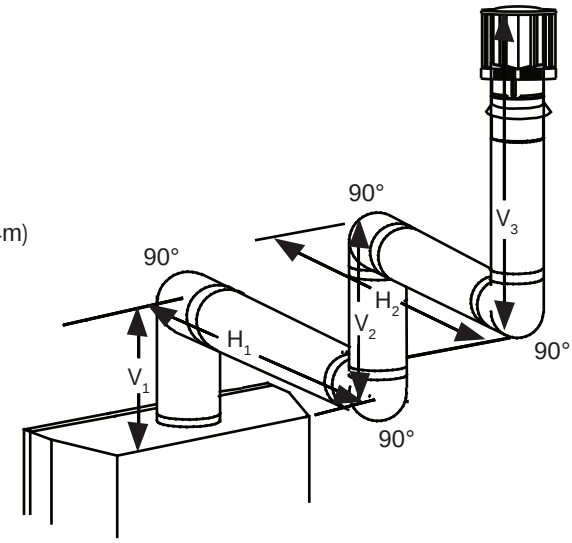

Formula 1: $H_T \leq V_T$
18.6 ft (5.7m) $\leq$ 21 ft (6.4m)
Formula 2: $H_T + V_T \leq$ 40 ft (12.19m)
39.6 ft (12.1m) $\leq$ 40 ft (12.2m)

Since both formulas are met, this vent configuration is acceptable.

venting requirements

$(H_T) > (V_T)$

Simple venting configurations.

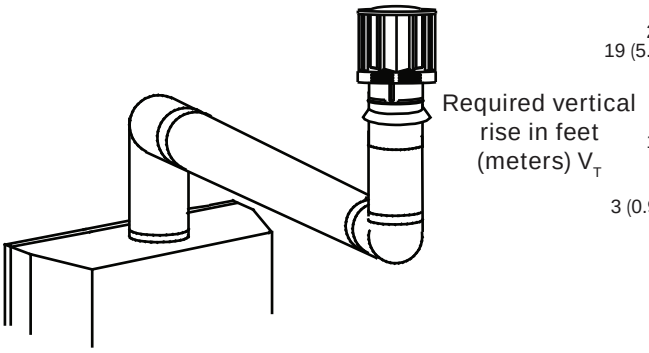

See graph to determine the required vertical rise V_T for the required horizontal run H_T.

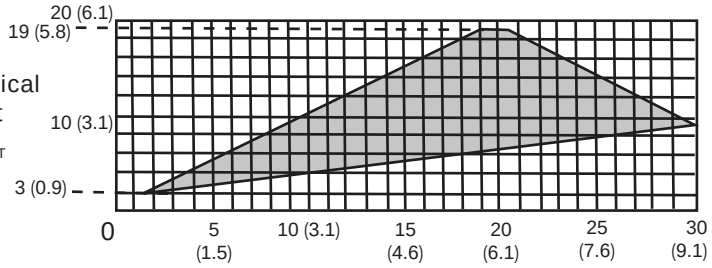

Horizontal vent run plus offset in feet (meters) H_T
The shaded area within the lines represents acceptable values for H_T and V_T

For vent configurations requiring more than two 90° elbows the following formulas apply:

Formula 1: $H_T \leq 3V_T$
Formula 2: $H_T + V_T \leq 40$ feet (12.2m)

Example:
V_1 = 2 ft (0.6m)
V_2 = 1 ft (0.3m)
V_3 = 1.5 ft (0.5m)
$V_T = V_1+V_2+V_3$= 2 ft (0.6m) + 1 ft (0.3m) + 1.5 ft (0.5m) = 4.5 ft (1.4m)
H_1 = 6 ft (1.8m)
H_2 = 2 ft (0.6m)
$H_R = H_1 + H_2$ = 6 ft (1.8m) + 2 ft (0.6m) = 8 ft (2.4m)
H_O = .03 (four 90° elbows - 90°)
= .03 (360° - 90°) = 8.1 ft (2.5m)
$H_T = H_R + H_O$ = 8 ft (2.4m) + 8.1 ft (2.5m) = 16.1 ft (4.9m)
$H_T + V_T$ = 16.1ft (4.9m) + 4.5 ft (1.4m) = 20.6 ft (6.3m)

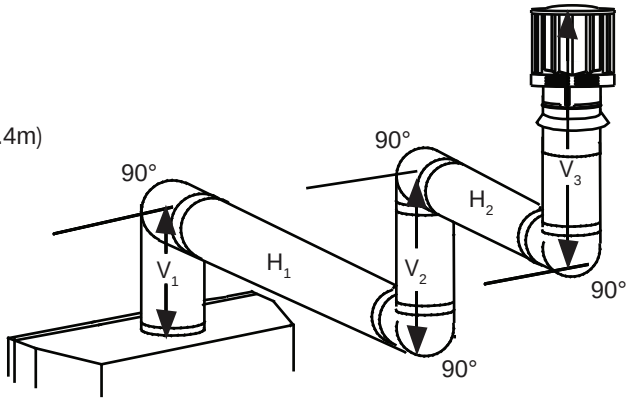

Formula 1: $H_T \leq 3V_T$
$3V_T$ = 3 ft (0.9m) x 4.5 ft (1.4m) = 13.5 ft (4.1m)
16.1 ft (4.9m) > 13.5 ft (4.1m)

Since this formula is not met, this vent configuration is <u>un</u>acceptable.

Formula 2: $H_T + V_T \leq 40$ ft (12.2m)
20.6 ft (6.3m) $\leq$ 40 ft (12.2m)

Since only formula 2 is met, this vent configuration is unacceptable and a new appliance location or vent configuration will need to be established to satisfy both formulas.

3.8 vent shield installation

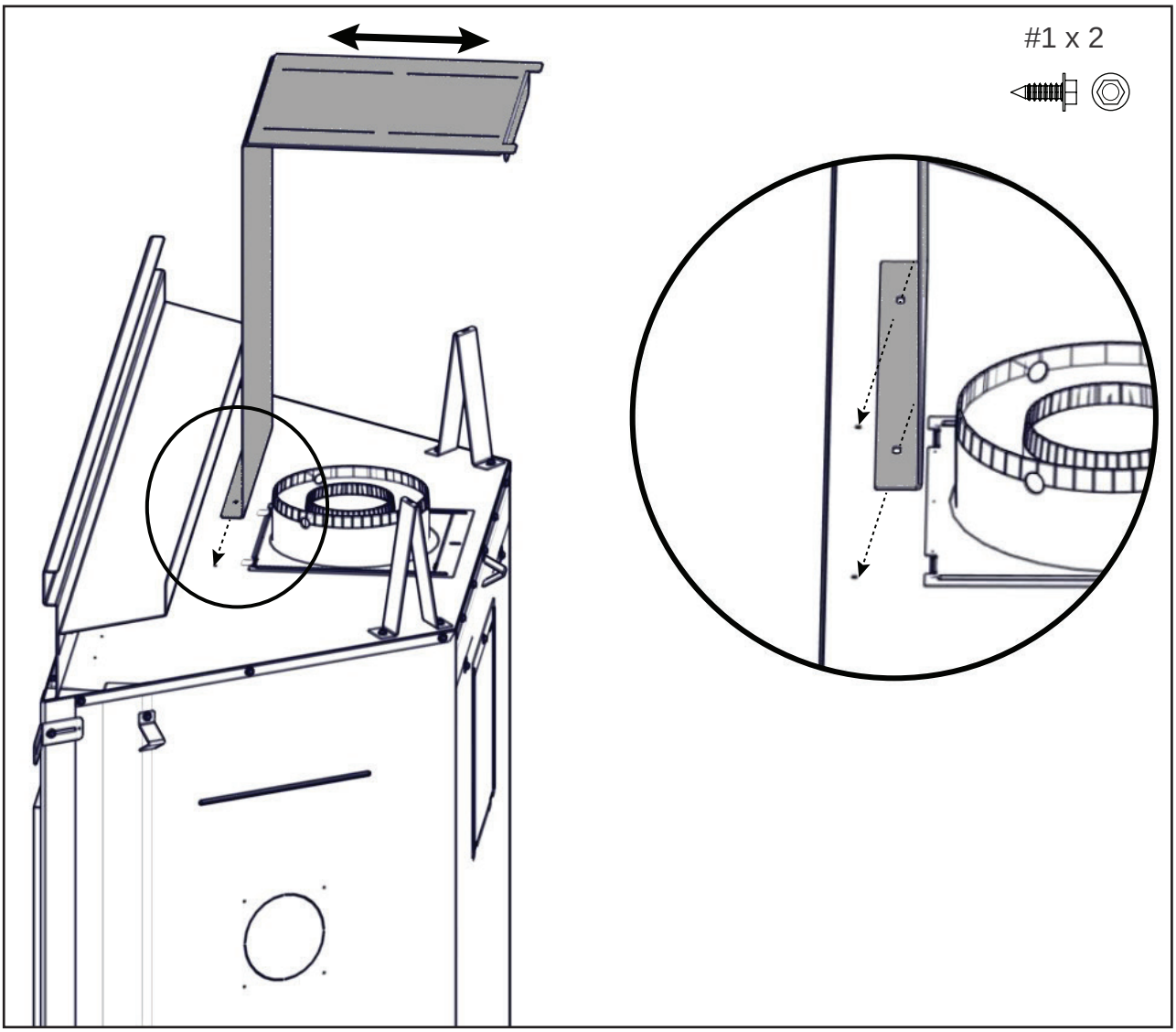

A. Form vent shield to a 90° angle (as illustrated in installation step above).

B. Install the vent shield by securing it to top of appliance using 2 screws (supplied).

C. Adjust vent shield top to suit horizontal run.

4.0 rough framing

note:

When using optional nishing accessories, the framing dimensions and nishing materials may differ from what is outlined in the section below; refer to the lea et instructions supplied in the accessory kit for speci c framing and nishing speci cations.

- Risk of re!
- In order to avoid the possibility of exposed insulation or vapour barrier coming in contact with the appliance body, it is recommended that the walls of the appliance enclosure be " nished" (i.e. drywall / sheetrock), as you would nish any other outside wall of a home. This will ensure that clearance to combustibles is maintained within the cavity.
- Do not notch the framing around the appliance stand offs. Failure to maintain air space clearance may cause over heating and re. Prevent contact with sagging or loose insulation or framing and other combustible materials. Block opening into the chase to prevent entry of blown-in insulation. Make sure insulation and other materials are secured.
- When constructing the enclosure, allow for nishing material thickness to maintain clearances. Framing or nishing material closer than the minimums listed must be constructed entirely of non-combustible materials. Materials consisting entirely of steel, iron, brick, tile, concrete, slate, glass or plasters, or any combination thereof are suitable. Materials that are reported as passing ASTM E136, standard test method for behaviour of materials in a vertical tube furnace at 1382ºF (750ºC) and UL763 shall be considered non-combustible materials.
- Minimum clearance to combusibles must be maintained or a serious re hazard could result.
- The appliance requires a minimum enclosure height. Measure from the appliance base.
- If steel stud framing kits with cement board are provided, or speci ed in the installation instructions, they must be installed.
- If speci ed in the installation instruction, nishing must be done using a non-combustible board, ceramic tile, marble, etc. Do NOT use wood or drywall. Any re rated drywall is not acceptable.

It is not necessary to install a hearth extension with this appliance.

4.1 minimum framing dimensions

note:

The minimum clearances from the top of the horizontal vent pipe to combustible materials may be reduced from 3” (76mm) to 1” (25mm) in those installations with a minimum 38” (96.5cm) vertical vent rise made immediately off the appliance collar.

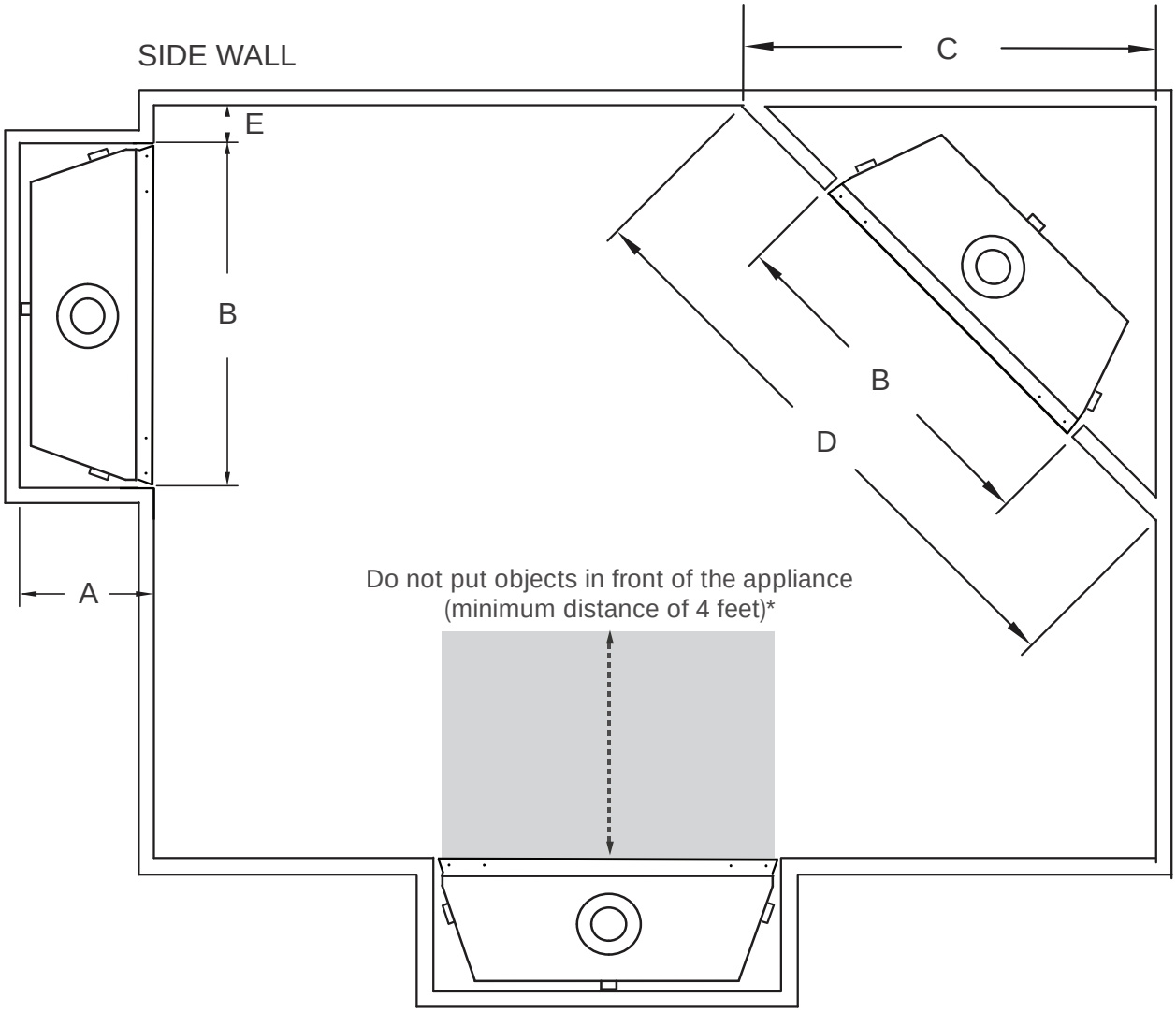

	BLP42	BLP46
A	18 9/16” (47.1cm)	18 9/16” (47.1cm)
B	42 1/2”	47 3/8” (120.3cm)
C	41 1/8”	44”
D	58 1/4”	62 1/4”
E	6” (15.2cm)	

* This applies to all installation types.

rough framing

Before framing your appliance, determine vent requirements before deciding the nal location of the appliance. After rough framing, place the appliance in its nal position.

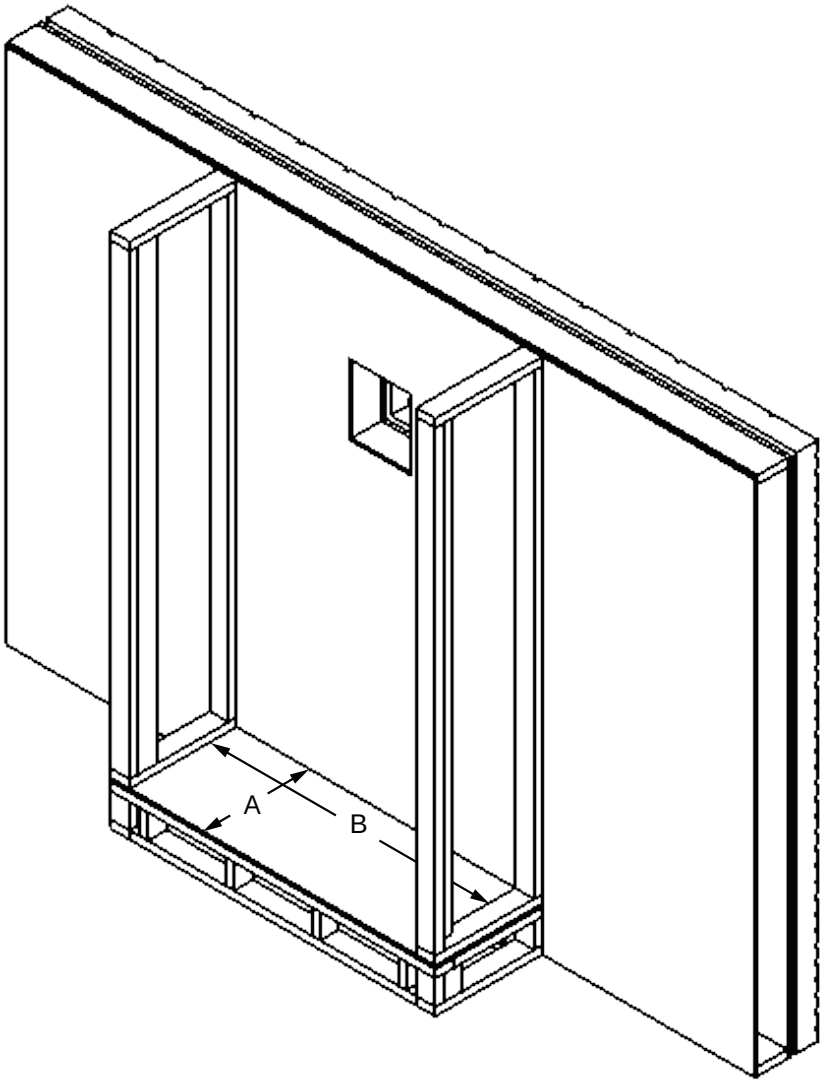

	BLP42	BLP46
A	18 9/16” (47.1cm)	
B	42 1/2”	47 3/8” (120.3cm)

- Ensure to unpack all loose materials from inside the rebox prior to connecting the gas and electrical supply If your appliance is supplied with a remote, ensure the remote receiver is in the “OFF” position prior to connecting the gas and electrical supply to the appliance.
- For safe and proper operation of the appliance, follow the venting instructions exactly. The appliance exhaust ue collar must be sealed using Mill Pac. All exhaust and intake vent pipe joints must be sealed using red RTV high temp silicone sealant (W573-0002) (not supplied) or black high temp Mill Pac (W573-0007) (not supplied).
- If using pipe clamps to connect rigid vent components, a minimum of 3 screws must also be used to ensure the connection cannot slip off.
- Do not clamp the exible vent pipe.
- Risk of re, explosion, or asphyxiation. Improper support of the entire venting system may allow vent to sag and separate. Use vent run supports and connect vent sections per installation instructions.
- Risk of re, do not allow loose materials or insulation to touch the vent pipe. Remove insulation to allow for the installation of the attic shield and to maintain clearances to combustibles.
- Do not ll the space between the vent pipe and enclosure with any type of material. Do not pack insulation or combustibles between ceiling restops. Always maintain speci ed clearances around venting and restop systems. Install wall shields and restops as speci ed. Failure to keep insulation or other materials away from vent pipe may cause re.
  For gas stoves only: If the appliance is installed directly on carpeting, vinyl tile, or other combustible material other than wood ooring, the appliance shall be installed on a metal or wood panel extending the full width and depth, unless otherwise tested.

For optimum performance, it is recommended that all horizontal runs have a minimum of 1/4" (6mm) rise per foot using exible venting. For safe and proper operation of the appliance, follow the venting instructions exactly.

venting installation

5.1 horizontal installation

⚠ WARNING

- The restop assembly must be installed with the vent shield to the top.
- Terminals must not be recessed into a wall or siding more than the depth of the return ange of the mounting plate.
- The vent shield must be xed in place by fastening the extended vent shield to the bend tabs using the supplied fasteners.

This application occurs when venting through an exterior wall. Having determined the correct height for the air terminal location, cut and frame a hole in the exterior wall, as illustrated, to accommodate the restop assembly. Dry t the restop assembly before proceeding to ensure the brackets on the rear surface t to the inside surface of the horizontal framing.

The vent shield must be installed to the full depth of the combustible wall. The length of the vent shield may cut shorter for combustible walls that less than 8 1/2" (216mm) thick.

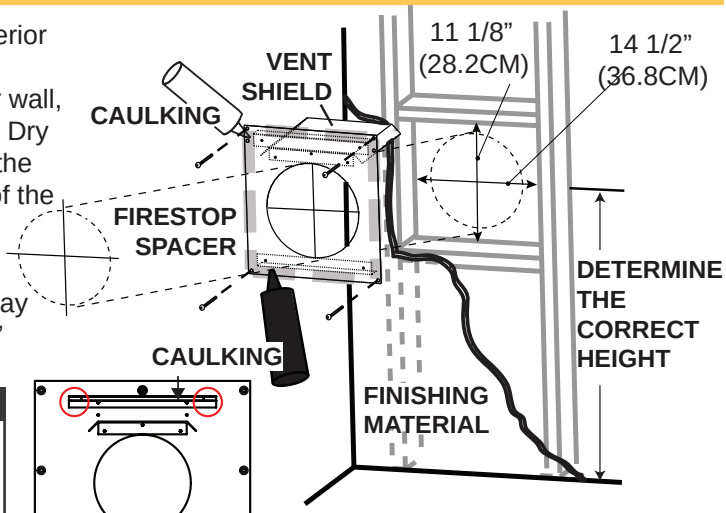

The above is for illustrative purposes only. Vents do not always pass through center of frame.

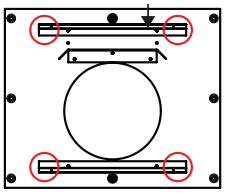

note:

Bend the tabs for reduced side clearances or move the shield for reduced top clearances (dependent on speci c appliance clearances). Do not ll the air space between the restop spacer and the exterior wall with any type of insulating material (i.e. spray foam).

A. Fold the vent shield up so that it is perpendicular to the spacer plate.

B. Bend the tabs located on either side of the vent shield so that they are just shy of 90º to the spacer plate.

C. On both sides of the restop, fasten the (W570-0018) screws through the clearance holes in the bend tabs and threaded into the holes in the vent shield.

D. Apply a bead of caulking around the outer edge of the restop assembly.

E. Screw the restop onto the wall/framing, using 4 screws.

F. Once the vent pipe is installed in its nal position, apply red RTV silicone (W573-0002) (not supplied) between the pipe and the restop.

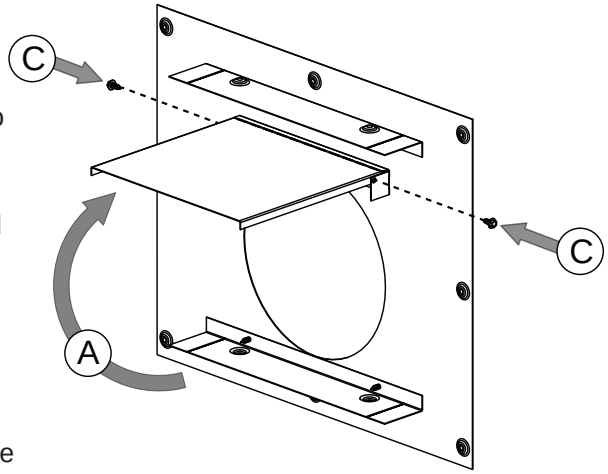

note:

Where the venting passes horizontally through a wall, you MUST use a Wolf Steel restop for all rigid and ex vent systems. The gap between the outside diameter of the vent and the restop MUST be completely sealed with high temperature RTV. When using ex venting, use restop assembly W010-3440 (not supplied).
When using rigid venting, use restop assembly 4DHFSN (not supplied).

5.2 vertical installation

This application occurs when venting through a roof. Installation kits for various roof pitches are available from your authorized dealer / distributor. See the “accessories” section to order speci c kits required.

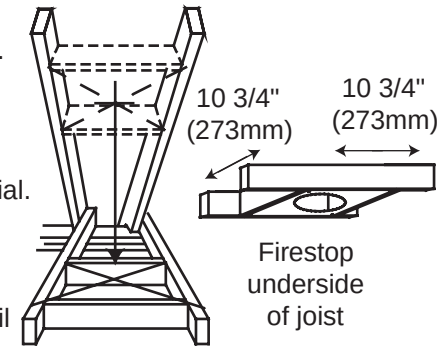

A. Determine the air terminal location, cut and frame a square opening, as illustrated, in the ceiling and the roof to provide the minimum 1" (25mm) clearance between the vent pipe and any combustible material. Try to center the vent pipe location midway between two joists to prevent having to cut them. Use a plumb bob to line up the center of the openings. A vent pipe shield will prevent any materials such as insulation, from lling up the 1" (25mm) air space around the pipe. Nail headers between the joist for extra support.

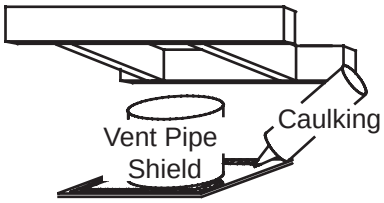

B. Apply a bead of caulking (not supplied) to the framework or to the Wolf Steel vent pipe shield plate or equivalent (in the case of a nished ceiling), and secure over the opening in the ceiling. A restop must be placed on the bottom of each framed opening in a roof or ceiling that the venting system passes through. Apply a bead of caulking all around and place a restop spacer over the vent shield to restrict cold air from being drawn into the room or around the replace. Ensure that both spacer and shield maintain the required clearance to combustibles. Once the vent pipe is installed in its nal position, apply red RTV silicone (W573-0002) (not supplied) between the pipe and the restop assembly.

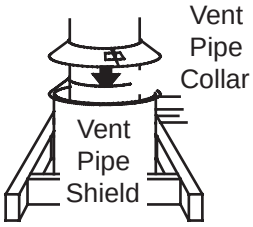

C. In the attic, slide the vent pipe collar down to cover up the open end of the shield and tighten. This will prevent any materials, such as insulation, from lling up the 1" (25mm) air space around the pipe.

note:

When the venting passes vertically through a ceiling, you may use either Wolf Steel restops or the venting manufacturer’s restops for rigid venting, provided they follow the required clearances listed in the appliance installation manual. For Wolf Steel exible venting, you MUST use the Wolf Steel restops listed below.
For 4”/7” appliances:
When using ex venting, use restop assembly W500-0292 (not supplied).
When using rigid venting, use restop assembly 4DFS (not supplied).
For 5”/8” appliances:
When using ex venting, use restop assembly W500-0028 (not supplied).
When using rigid venting, use restop assembly 5DFS (not supplied).

venting installation

5.3 using either exible or rigid vent components

- Do not allow the inner ex pipe to bunch up on horizontal or vertical runs and elbows. Keep it pulled tight.
- Spacers are attached to the inner ex pipe at predetermined intervals to maintain an even air gap to the outer ex pipe. This gap is required for safe operation. A spacer is required at the start, middle, and end of each elbow to ensure this gap is maintained. These spacers must not be removed.

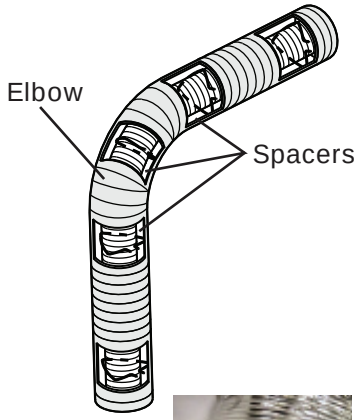

For safe and proper operation of the appliance, follow the venting instructions exactly.

The vent system must be supported approximately every 3 feet (0.9m) for both vertical and horizontal runs. Use Wolf Steel Ltd. support ring assembly or equivalent noncombustible strapping to maintain the minimum clearance to combustibles for both vertical and horizontal runs.

All inner ex pipe and outer ex pipe joints may be sealed using high temperature red RTV silicone W573-0002 (not supplied) or the high temperature sealant W573-0007 Mill Pac (not supplied). However, the high temperature sealant W573-0007 Mill Pac (not supplied) must be used on the joint connecting the inner ex pipe and the exhaust ue collar.

Use only approved exible vent pipe kits marked:

"Wolf Steel Approved Venting" or "E2" as identi ed by the stamp only on the ex pipes.

When installing using rigid vent components, follow the manufacturer's installation and vent sealing requirements.

5.4 using exible vent components

5.4.1 horizontal air terminal installation

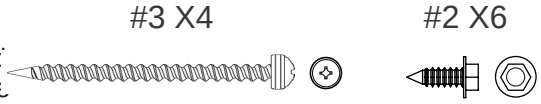

A. Stretch the inner ex pipe to the required length taking into account the additional length needed for the nishec wall surface. Apply a heavy bead of the red RTV silicone (W573-0002) (not supplied) to the inner sleeve of the air terminal. Slip the vent pipe a minimum of 2" (50.8mm) over the inner sleeve of the air terminal and secure with a minimum of 3 screws.

B. Using the outer ex pipe, slide over the outer combustion air sleeve of the air terminal and secure with a minimum of 3 screws. Seal using red RTV silicone (W573-0002) (not supplied).

C. Insert the vent pipes through the restop maintaining the required clearance to combustibles. Holding the air terminal (lettering in an upright, readable position), secur to the exterior wall and make weather tight by sealing with caulking (not supplied).

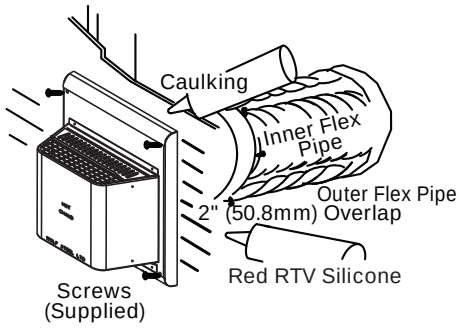

D. If more vent pipe needs to be used to reach the replace, couple them together, as illustrated. The vent system must be supported approximately every 3 feet (0.9m) for both vertical and horizontal runs. Use non-combustible strapping to maintain the minimum clearance to combustibles.

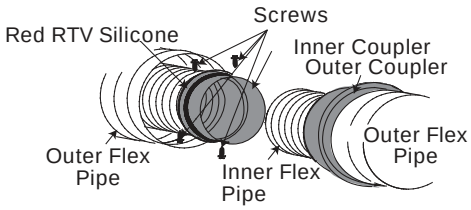

E. Stove Appliances Only: From inside the house, using Red RTV Silicone (W573-0002) (not supplied), seal between the vent pipe and the restop. Then slide the black trim collar over the vent pipe up to the restop.

The air terminal mounting plate may be recessed into the exterior wall or siding no greater than the depth of its return ange.

5.4.2 vertical air terminal installation

- Maintain a minimum 2” (51mm) space between the air inlet base and the storm collar.

note:
Fastening hardware provided with appropriate roof terminal and liner kits.

A. Fasten the roof support to the roof using 6 screws. The roof support is optional. In this case, the venting is to be adequately supported using either an alternate method suitable to the authority having jurisdiction or the optional roof support.

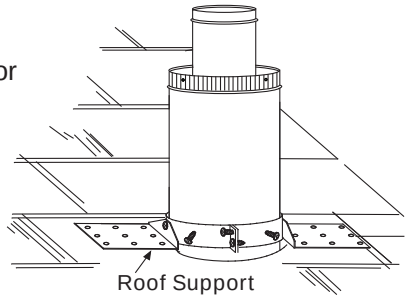

B. Stretch the inner ex pipe to the required length. Slip the inner ex pipe a minimum of 2” (51mm) over the inner pipe of the air terminal connector and secure with a minimum of three screws, when 4/7, 5/8 and 3/5 venting is used and a minimum of six screws when using 8/10 or 8/11 venting. Seal using a heavy bead of red RTV silicone sealant (W573-0002) (not supplied).

C. Repeat using the outer ex pipe, using a heavy bead of red RTV silicone sealant (W573-0002) (not supplied) and a minimum of three screws, when 4/7, 5/8 and 3/5 venting is used and a minimum of six screws when using 8/10 or 8/11 venting.

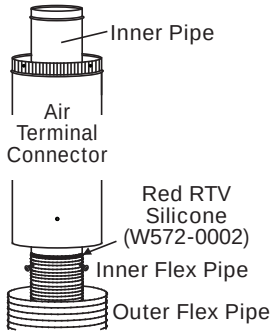

D. Thread the air terminal connector / vent pipe assembly down through the roof. The air terminal must be positioned vertically and plumb. Attach the air terminal connector to the roof support, ensuring that the top of the air terminal is 16” (40.6cm) above the highest point that it penetrates the roof.

E. Remove nails from the shingles, above and to the sides of the air terminal connector. Place the ashing over the air terminal connector leaving a min. 3/4” (19mm) of the air terminal connector showing above the top of the ashing. Slide the ashing underneath the sides and upper edge of the shingles. Ensure that the air terminal connector is properly centered within the ashing, giving a 3/4” (19mm) margin all around. Fasten to the roof. Do not nail through the lower portion of the ashing. Make weather-tight by sealing with caulking. Where possible, cover the sides and top edges of the ashing with roo ng material.

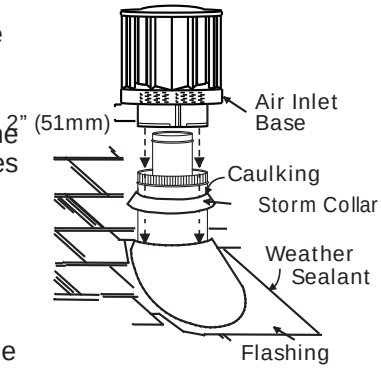

F. Aligning the seams of the terminal and air terminal connector, place the terminal over the air terminal connector making sure the vent pipe goes into the hole in the terminal. Secure with a minimum of three screws, when 4/7, 5/8 and 3/5 venting is used and a minimum of six screws when using 8/10 or 8/11 venting.

G. Apply a heavy bead of weatherproof caulking 2” (51mm) above the ashing. Install the storm collar around the air terminal and slide down to the caulking. Tighten to ensure that a weather-tight seal between the air terminal and the collar is achieved.

H. If more vent pipe needs to be used to reach the appliance, see “horizontal air terminal installation” section.

5.4.3 appliance vent connection

A. Install the inner ex pipe to the appliance. Secure with a minimum of three screws when installing 3”/5”, 4”/7” or 5”/8” venting, or six screws when installing 8”/10” or 8”/11” venting. Seal the joint and screw holes using Mill Pac sealant (W573-0007) (not supplied).

B. Install the outer ex pipe to the appliance. Secure with a minimum of three screws when installing 3”/5”, 4”/7” or 5”/”8 venting, or six screws when installing 8”/10” or 8”/11” venting. Seal the joints using high temperature red RTV silicone (W573-0002) (not supplied).

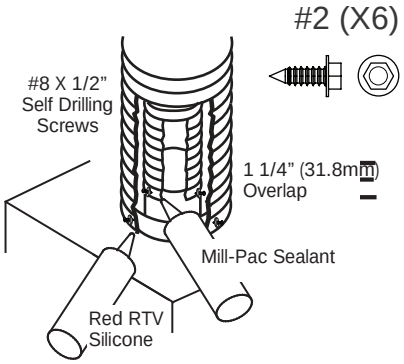

venting installation

5.5 using rigid vent components

5.5.1 horizontal air terminal installation

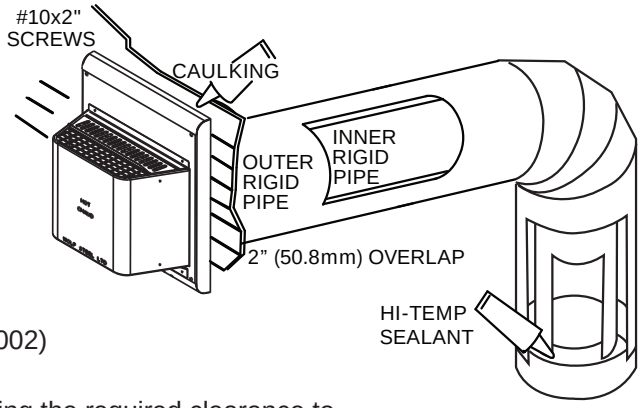

A. Move the appliance into position. Measure the vent length required between terminal and appliance taking into account the additional length needed for the nished wall surface and any 2” (50.8mm) overlaps between venting components.

B. Apply a heavy bead of Mill Pac sealant (W573-0007) (not supplied) to the outer edge of the inner collar of the appliance. Attach the rst inner rigid pipe component and secure using a minimum of three screws. Repeat using the outer rigid pipe. Seal using Red RTV Silicone (W573-0002) (not supplied).

C. Insert the vent pipes through the restop maintaining the required clearance to combustibles. Apply a heavy bead of Red RTV Silicone (W573-0002) (not supplied) to both the inner sleeve and outer sleeve of the air terminal. Slide the terminal sleeves into the rigid pipes a minimum of 1 1/4”. Holding the air terminal (lettering in an upright, readable position), secure to the exterior wall and make weather tight by sealing with caulking (not supplied).

The air terminal mounting plate may be recessed into the exterior wall or siding no greater than the depth of the return ange.

5.5.2 vertical air terminal installation

- Maintain a minimum 2” (51mm) space between the air inlet base and the storm collar.

note:

Fastening hardware provided with appropriate roof terminal and liner kits.

Before attaching elbows to the collars on the back of the appliance, 1 1/2” (38.1mm) will need to be trimmed off the 4” (101.6mm) collar.

REAR VENT APPLICATIONS ONLY: Attach 4” (101.6mm) and 7” (177.8mm) elbows to the appliance. Secure with 3 screws and seal the joints and screw heads using high temperature sealant. Proceed to step A below.

TOP AND REAR VENT APPLICATIONS:

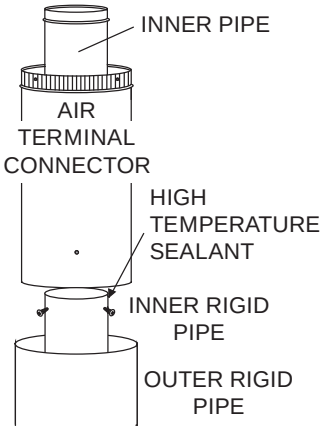

A. Move the appliance into position.

B. Fasten the roof support to the roof using the screws provided. The roof support is optional. In this case the venting is to be adequately supported using either an alternate method suitable to the authority having jurisdiction or the optional roof support.

C. Apply high temperature sealant W573-0007 (not supplied) to the outer edge of the inner sleeve of the air terminal. Slip the inner coupler a minimum of 2” (51mm) over the sleeve and secure using 3 screws.

D. Apply high temperature sealant W573-0002 (not supplied) to the outer edge of the of the outside sleeve of the air terminal connector. Slip the outer coupler over the sleeve and secure as before. Trim the outer coupler even with the inner coupler end.

E. Thread the air terminal connector / vent pipe assembly down through the roof support and attach, ensuring that a minimum 16” (40.6cm)of air terminal connector will penetrate the roof when fastened. If the attic space is tight, we recommend threading the Wolf Steel vent pipe collar or equivalent loosely onto the air terminal connector / vent pipe assembly as it is passed through the attic. The air terminal connector must be positioned vertically and plumb.

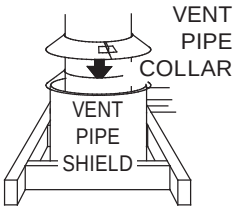

F. Remove nails from the shingles, above and to the sides of the air terminal connector. Place the ashing over the air terminal connector and slide it underneath the sides and upper edge of the shingles. Ensure that the air terminal connector is properly centered within the ashing, giving a 3/4” (19.1mm) margin all around. Fasten to the roof. Do NOT nail through the lower portion of the ashing. Make weather-tight by sealing with caulking. Where possible, cover the sides and top edges of the ashing with roo ng material.

G. Apply a heavy bead of waterproof caulking 2” (51mm) above the ashing. Install the storm collar around the air terminal and slide down to the caulking. Tighten to ensure that a weather-tight seal between the air terminal connector and the collar is achieved.

H. Continue adding rigid venting sections, sealing and securing as above. Attach the inner collapsed telescopic sleeve to the last section of rigid piping. Secure with screws and seal. Repeat using the outer telescopic sleeve.

I. Run a bead of high temperature sealant W573-0007 (not supplied) around the outside of the inner elbow for rear vent applications or the inner collar for top vent applications. Pull the telescopic sleeve a minimum of 2” (51mm) onto the elbow. Secure with three screws. Repeat with the outer telescopic sleeve.

TOP VENT APPLICATIONS ONLY:

K. In the attic, slide the vent pipe collar down to cover up the open end of the shield and tighten. This will prevent any materials, such as insulation, from lling up the 1” (25mm) air space around the pipe.

5.5.3 restricting vertical vents

⚠ WARNING

- Turn off gas and electrical supply before servicing the appliance.
- Appliance may be hot, do not service until appliance is cool.
- For safe and proper operation of the appliance, follow the venting instruction exactly.
- To avoid danger of suffocation, keep the packaging bag away from babies and children. Do not use in cribs, beds, carriages or play pens. This bag is not a toy. Knot before throwing away.

Vertical installations may display a very active ame. If this appearance is not desirable, the exhaust outlet may be restricted with a Wolf Steel approved restrictor kit. This kit is not recommended for short vertical vent runs.

Depending on the model and/or year of your appliance, mounting holes may not exist.

A. If mounting holes exist, remove the screws from the rebox top, align the restrictor plate as illustrated and secure.

B. If mounting holes do not exist, align the restrictor plate as illustrated and secure using the two #8x1/2 hex head sheet metal screws supplied.

C. Ensure the plate will pivot at the slot up into the exhaust outlet.

D. Depending on the amount of restriction desired, the restrictor plate can be left at for most restriction or bent up for varying degrees of restriction.

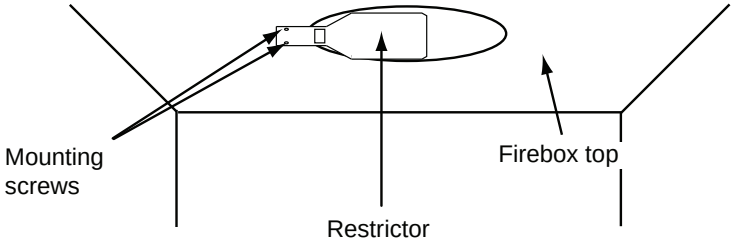

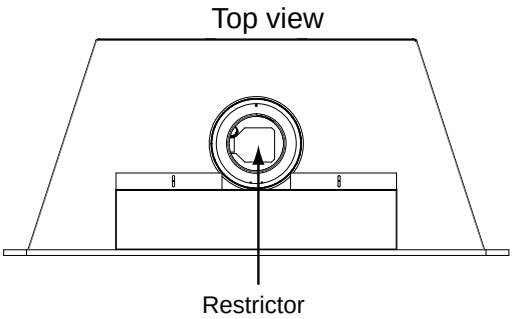

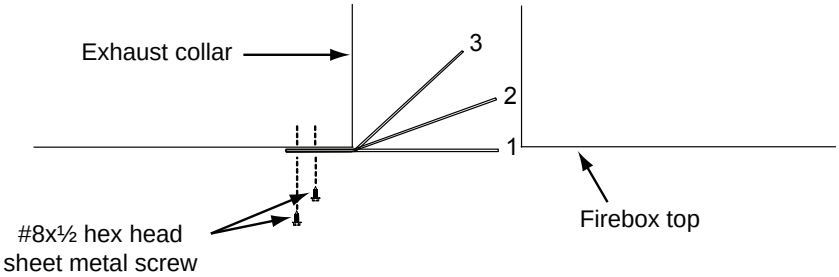

1. Most restriction
2. Moderate restriction
3. Least restriction

5.6 vertical through existing chimney

- Risk of re.
- Co-axial to co-linear venting con gurations must only be used in a non-combustible chimney or enclosure. Installation in a combustible enclosure could result in a re.

This appliance is designed to be attached to a 3” (76.2mm) co-linear aluminum ex vent system running the full length of a masonry chimney.

The ex liners accommodate any contours of a masonry chimney, however, it is necessary to keep the exible liners as straight as possible. The inlet air collar of the termination cap must be connected to the air intake ex liner and the exhaust collar must be connected to the exhaust exible liner.

Both Simpson Duravent and Selkirk co-linear to co-axial adaptors have been approved on this appliance

note:
A vent adaptor will be required directly off the appliance.

Follow vent manufacturer’s installation instructions.

Different manufacturer’s venting components must not be combined. Once the preferred manufacturer’s appliance adaptor has been attached, the remainder of the system must be that of the same manufacturer.

The only exception to this rule is to use Wolf Steel’s approved 3” (76.2mm) ex liner and co-linear termination.

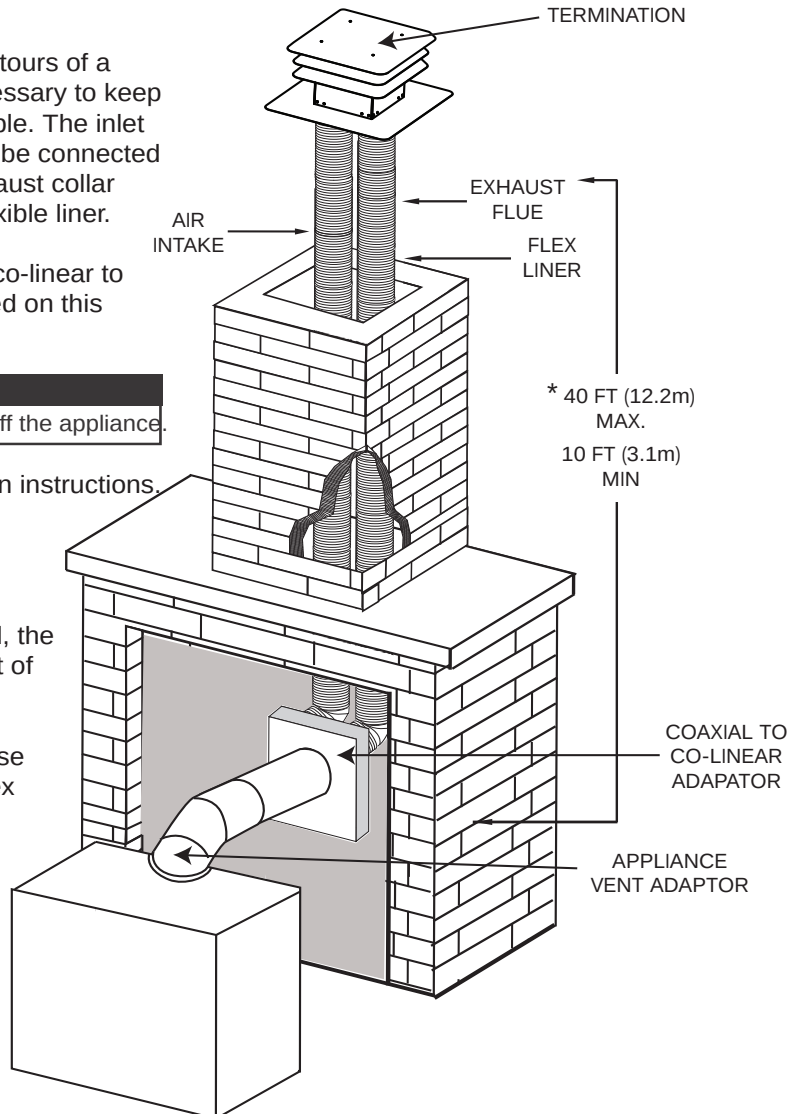

* Measured from appliance ue collar to termination ue collar

6.0 electrical information

6.1 hard wiring connection

It is necessary to hard wire this appliance.
This appliance must be electrically connected and grounded in accordance with local codes. In the absence of local codes, use the current CSA C22.1 Canadian Electrical Code in Canada or the ANSI/NFPA 70-1996 National Electrical Code in the United States.

6.2 receptacle wiring diagram

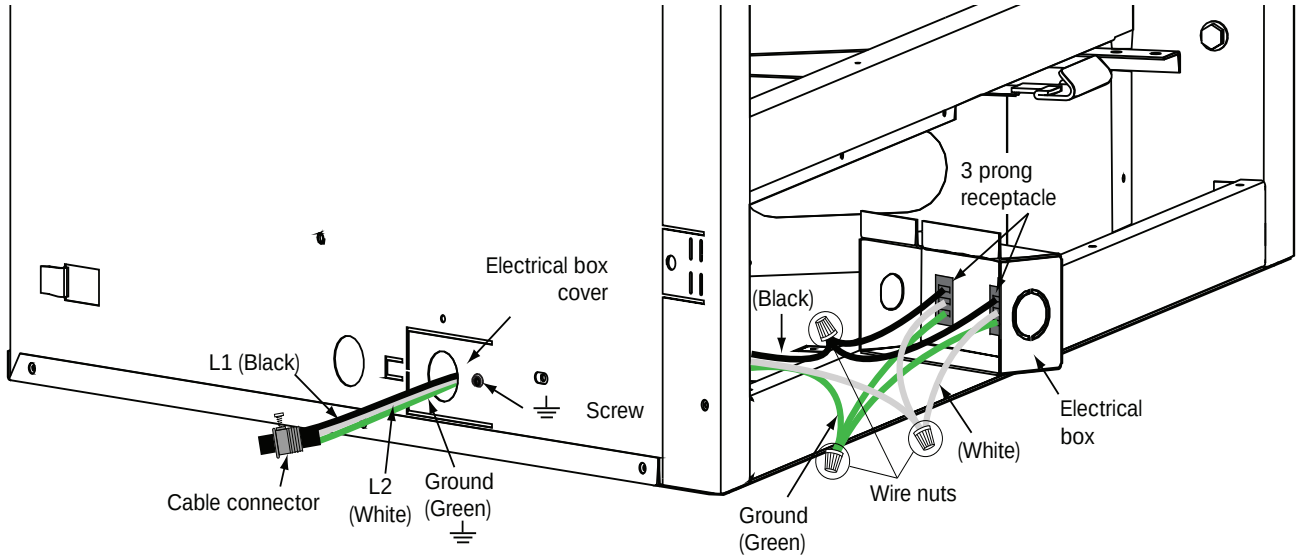

6.3 electronic wiring diagram

- Do not use this appliance if any part has been under water. Call a quali ed service technician immediately to have the appliance inspected for damage to the electrical circuit.
- Risk of electrical shock or explosion. Do not wire 110V to the valve or to the appliance wall switch. Incorrect wiring will damage controls.
- All wiring should be done by a quali ed electrician and shall be in compliance with local codes. In the absence of local codes, use the current CSA22.1 Canadian Electric Code in Canada or the current National Electric Code ANSI/NFPA NO. 70 in the United States.
- Always light the pilot whether for the rst time or if the gas supply has run out, with the glass door opened or removed.

6.4 initializing the transmitter / battery holder for the rst time

WARNING

- Ensure the gas and electrical power to the appliance is turned off.
- Appliance may be hot, do not service until the appliance has cooled.

A. Install the 4 AA batteries into the Pro ame 2 battery holder, note the polarity of the batteries and insert as indicated on the cover (+/-).

B. Ensure the 3 position slider switch is switched to the “REMOTE” position (middle position).

C. Press the reset/programming button, use a small object such as a paper clip in order to reach the button marked PRG, as shown in the illustration below.

D. The battery holder will beep 3 times to indicate that it’s ready to synchronize with the transmitter.

E. Install the 3 AAA batteries into the transmitter, as shown in the photograph below, then press the ON button. The battery holder will beep 4 times to indicate that the transmitter’s command is accepted.

note:

The initializing process must be completed within 10 seconds of pressing the reset/programming button (PRG).

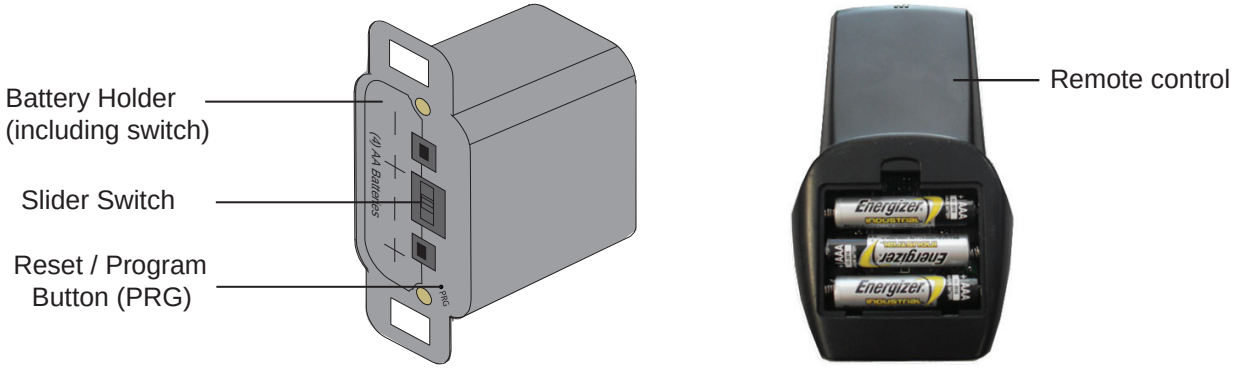

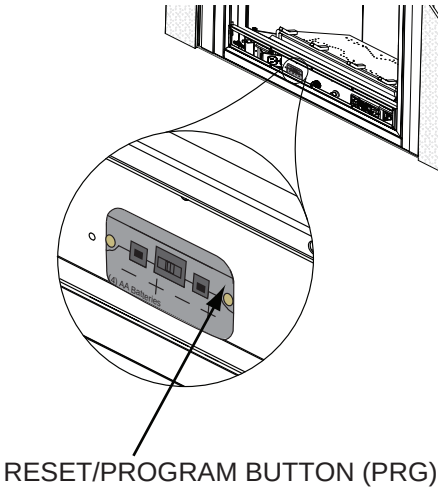

electrical information

6.5 wiring diagram

⚠ WARNING

- Do not wire 110 volts to the valve or wall switch.

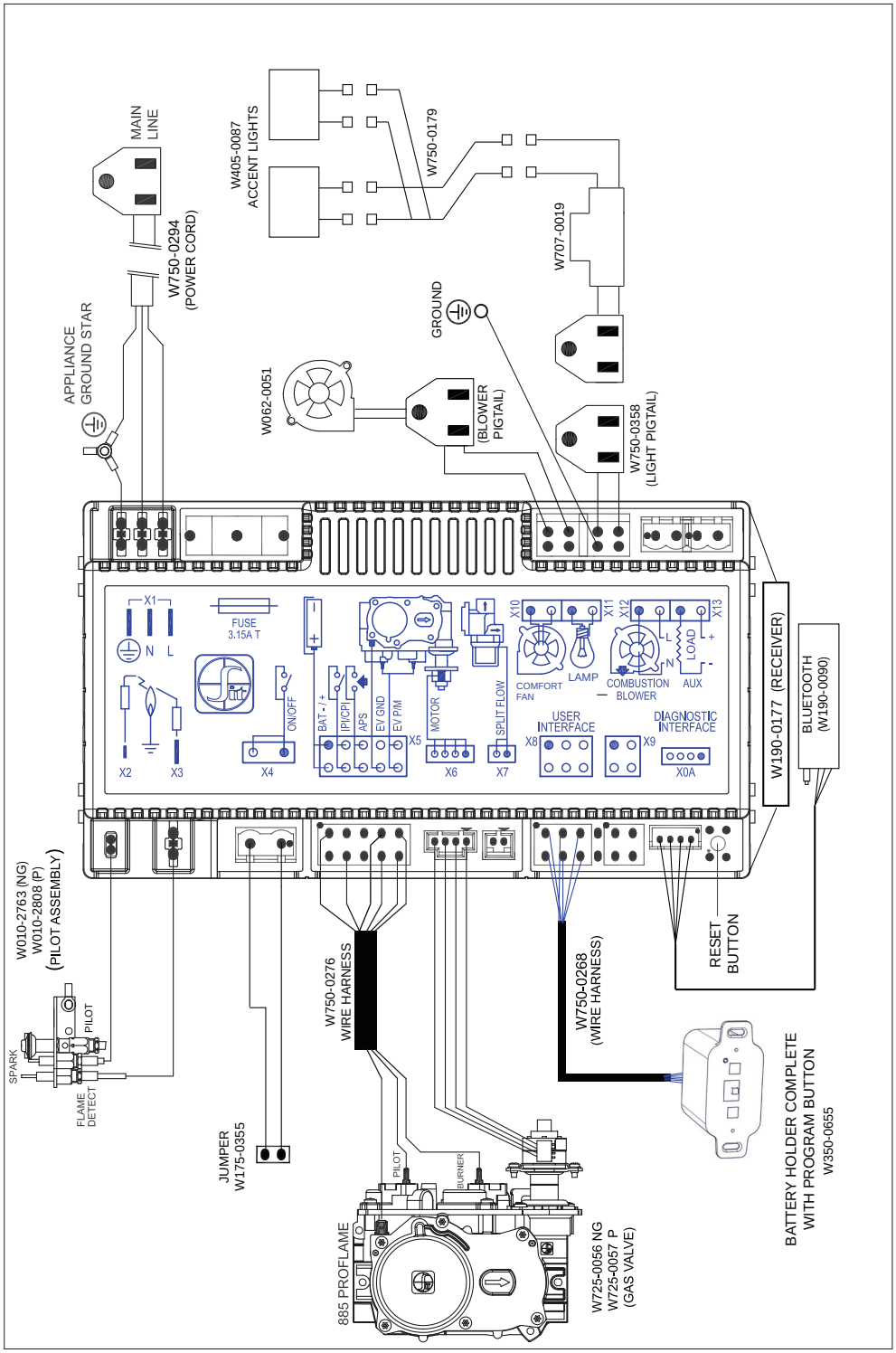

7.0 gas installation

- Risk of re, explosion, or asphyxiation. Ensure there are no ignition sources such as sparks or open ames.
- Support gas control when attaching gas supply pipe to prevent damaging gas line.
- Always light the pilot whether for the rst time or if the gas supply has run out with the glass door opened or removed. Purging of the gas supply line should be performed by a quali ed service technician. Ensure that a continuous gas ow is at the burner before closing the door. Ensure adequate ventilation. For gas and electrical locations, see “dimensions” section.
- All gas connections must be contained within the appliance when complete (gas replaces only).
- High pressure will damage valve. Disconnect gas supply piping before testing gas line at test pressures above 1/2 PSIG.
- Valve settings have been factory set, do not change.

Installation and servicing to be done by a quali ed installer.

- Move the appliance into position and secure.
- If equipped with a ex connector, the appliance is designed to accept a 1/2” (13mm) gas supply. Without the connector, it is designed to accept a 3/8” (9.5mm) gas supply. The appliance is equipped with a manual shut off valve to turn off the gas supply to the appliance.
- Connect the gas supply in accordance to local codes. In the absence of local codes, install to the current CAN/CSA-B149.1 Installation Code in Canada or to the current National Fuel Gas Code, ANSI Z223.1 / NFPA 54 in the United States.
- When exing any gas line, support the gas valve so that the lines are not bent or kinked.
- The gas line ex-connector should be installed to provide suf cient movement for shifting the burner assembly on its side to aid with servicing components.
- Check for gas leaks by brushing on a soap and water solution. Do not use open ame.

After installing the electrical wiring and gas lines, ensure to test the appliance before nishing the framing and nishing the appliance.

8.0 operation

- If you do not follow these instructions exactly, a re or explosion may result causing property damage, personal injury, or loss of life.
- If applicable, always light the pilot whether for the rst time or if the gas supply has run out with the glass door opened or removed.

Ensure that a continuous gas ow is at the burner before installing the door. When lit for the rst time, the appliance will emit an odor for a few hours. This is a normal temporary condition caused by the “burn-in” of paints and lubricants used in the manufacturing process and will not occur again. After extended periods of non-operation, such as, following a vacation or warm weather season, the appliance may emit a slight odor for a few hours. This is caused by dust particules in the heat exchanger burning off. In both cases, open a window to suf ciently ventilate the room.

FOR YOUR SAFETY READ BEFORE LIGHTING

- Do not turn on if children or other at risk individuals are near the appliance.
- This appliance is equipped with an ignition device which automatically lights the pilot. Do not try to light the pilot by hand.
- Before operating, smell all around the appliance area for gas and next to the oor because some gas is heavier than air and will settle on the oor.
- Do not use this appliance if any part has been under water. Immediately call a quali ed service technician to inspect the appliance and replace any part of the control system and any gas control which has been underwater.

WHAT TO DO IF YOU SMELL GAS

- Turn off all gas to the appliance.
- Open windows.
- Do not try to light any appliance.
- Do not touch any electric switch; do not use any phone in your building
- Immediately call your gas supplier from a neighbour’s phone. Follow the gas supplier’s instructions.
- If you cannot reach your gas supplier, call the re department.

LIGHTING INSTRUCTIONS

note:
This appliance is equipped with an ignition device which automatically lights the pilot. Do not try to light the pilot by hand.

A. Stop! Read the above safety information on this label.
B. Remove batteries from the transmitter and set thermostat to lowest setting, if equipped.
C. Turn off all electrical power to the appliance.
D. Open the glass door, if equipped.
E. Turn the manual shut-off valve clockwise to the “OFF” position. (Shut-off valve is located on the ex connector).
F. Wait ve (5) minutes to clear out any gas. If you smell gas including near the oor, STOP! Follow the instructions above in the “WHAT TO DO IF YOU SMELL GAS” section. If you don’t smell gas; close the glass door and go to the next step.
G. Turn the manual shut-off valve counter clockwise to the “ON” position.
H. Turn on all electrical power to the appliance and re-install the batteries into the transmitter. Set thermostat to desired setting, if equipped.
I. Turn on the remote wall switch to the appliance.
J. If the appliance will not operate, follow instructions “TO TURN OFF GAS” and call your service technician or gas supplier.

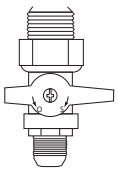

MANUAL SHUT-OFF
(SHOWN IN OFF POSITION)

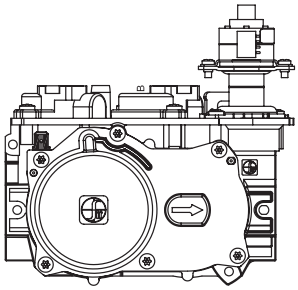

TO TURN OFF GAS

A. Set thermostat to lowest setting, if equipped.
B. Turn off the remote wall switch to the appliance.
C. Turn off all electric power to the appliance if service is to be performed.
D. Turn manual shutoff valve clockwise to the “OFF” positon. Do not force.

8.1 pilot on demand

This appliance is equipped with an “On Demand” intermittent pilot ignition system (IPI) which also includes a continuous pilot ignition (CPI) mode with an integrated seven day timer. This system minimizes your appliance’s carbon footprint as well as reducing its annual fuel consumption and operating costs.

In IPI mode, the pilot will ignite prior to the main burner, when the appliance is turned on using a switch, remote or from a call for heat with the thermostat (if equipped). Once the appliance is turned off (or the call for heat is satis ed), the main burner and pilot ame will shut down.

The continuous (CPI) mode is intended to enhance the performance of the appliance during the startup phase in colder climates and extreme weather by keeping the system warm when the main burner is not in use. However, the timer feature provides the convenience that the appliance automatically switches off the pilot when the appliance has not been used for seven days to save unnecessary fuel consumption.

When the CPI function is turned on, the pilot will remain on after the main burner is turned off. A timer will then begin the countdown for approximately seven days before shutting off the pilot if the appliance is not used. This countdown will reset anytime the appliance main burner is used. Therefore, if the appliance is regularly used day to day, the pilot will remain on. However, this system does not require the user to remember to turn the pilot off as summer approaches and avoids unnecessary fuel consumption while still readily turned back on when the cold weather returns.

(Fig. 1)

Your appliance may be equipped with an ACS or remote control device (Fig. 1) which enables you to select IPI or CPI modes.

If your appliance is equipped with an ACS switch, it has the option to change modes:
Fig. 2: Flipping the switch ON turns on the continuous pilot with timer and ipping the switch OFF turns on the intermittent pilot ignition.
Fig. 3: If installed with the blue wire facing up, ipping the switch UP turns on the continuous pilot with timer and ipping the switch DOWN turns on the intermittent pilot ignition. If installed with the white wire facing up, the opposite is true.

If your appliance is equipped with a remote control device capable of selecting IPI / CPI modes, refer to remote operating instructions.

In order to start your pilot, turning the main burner on with the switch, remote or thermostat and then turning it off will reactivate the continuous pilot mode and reset the seven day timer.

For further information, refer to www.napoleon.com/pilotondemand.

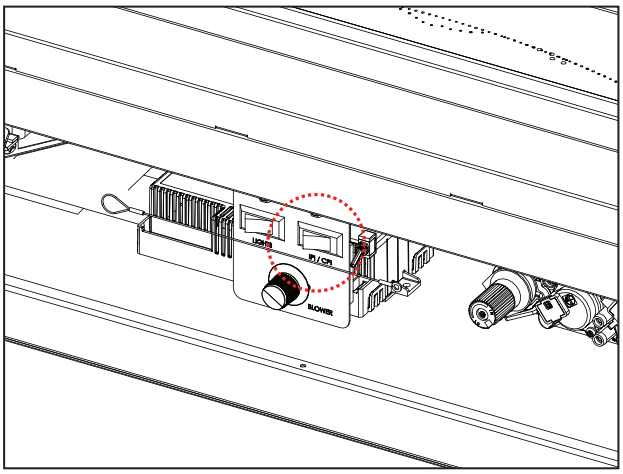

(Fig. 2)

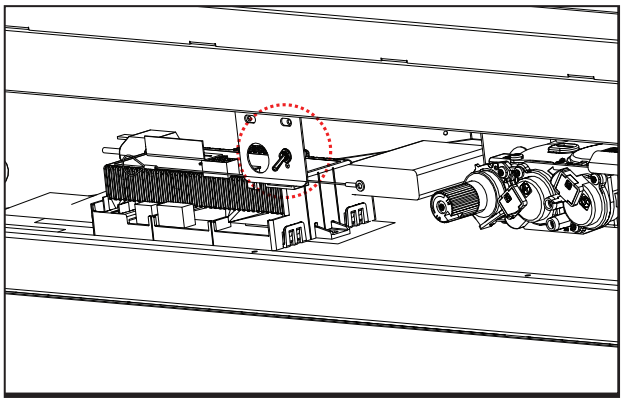

(Fig. 3)

9.0 nish framing

9.1 nailing tab installation

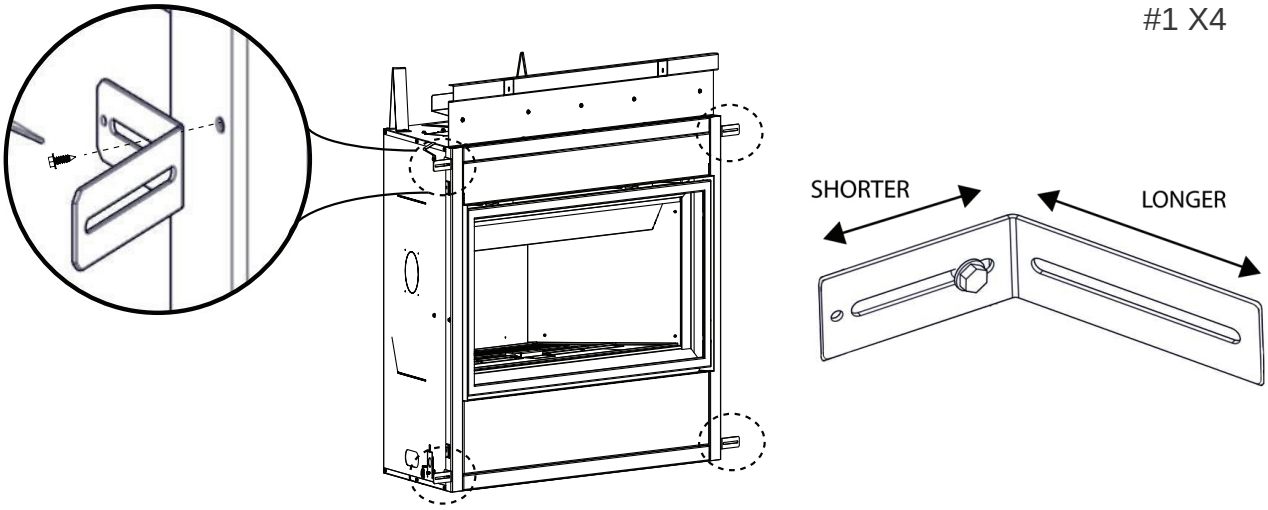

Use one screw to secure the short side of the nailing bracket to the appliance. Repeat for 3 other locations.

note:
Adjust bracket to suit your desired nishing material.

Bend tabs 180º upwards and secure to header.

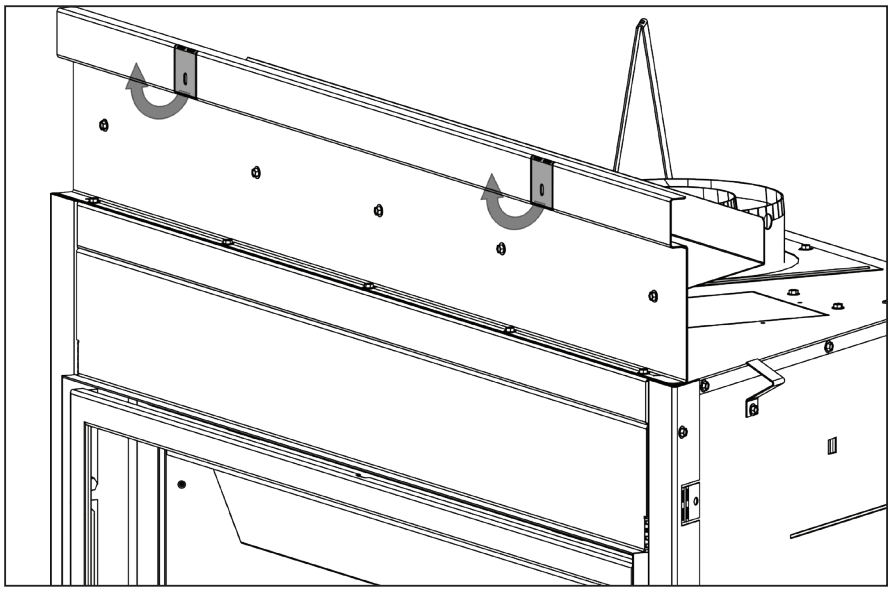

note:
See “venting requirements”, “venting installation”, “electrical information” and “gas installation” sections prior to nish framing.

9.2 ush

WARNING

- Do not build into this area - it must be left clear to provide adequate clearance for the vent in this 14” (35.6cm) wide area centered along the front of the appliance. The appliance should be in its nal location before framing.

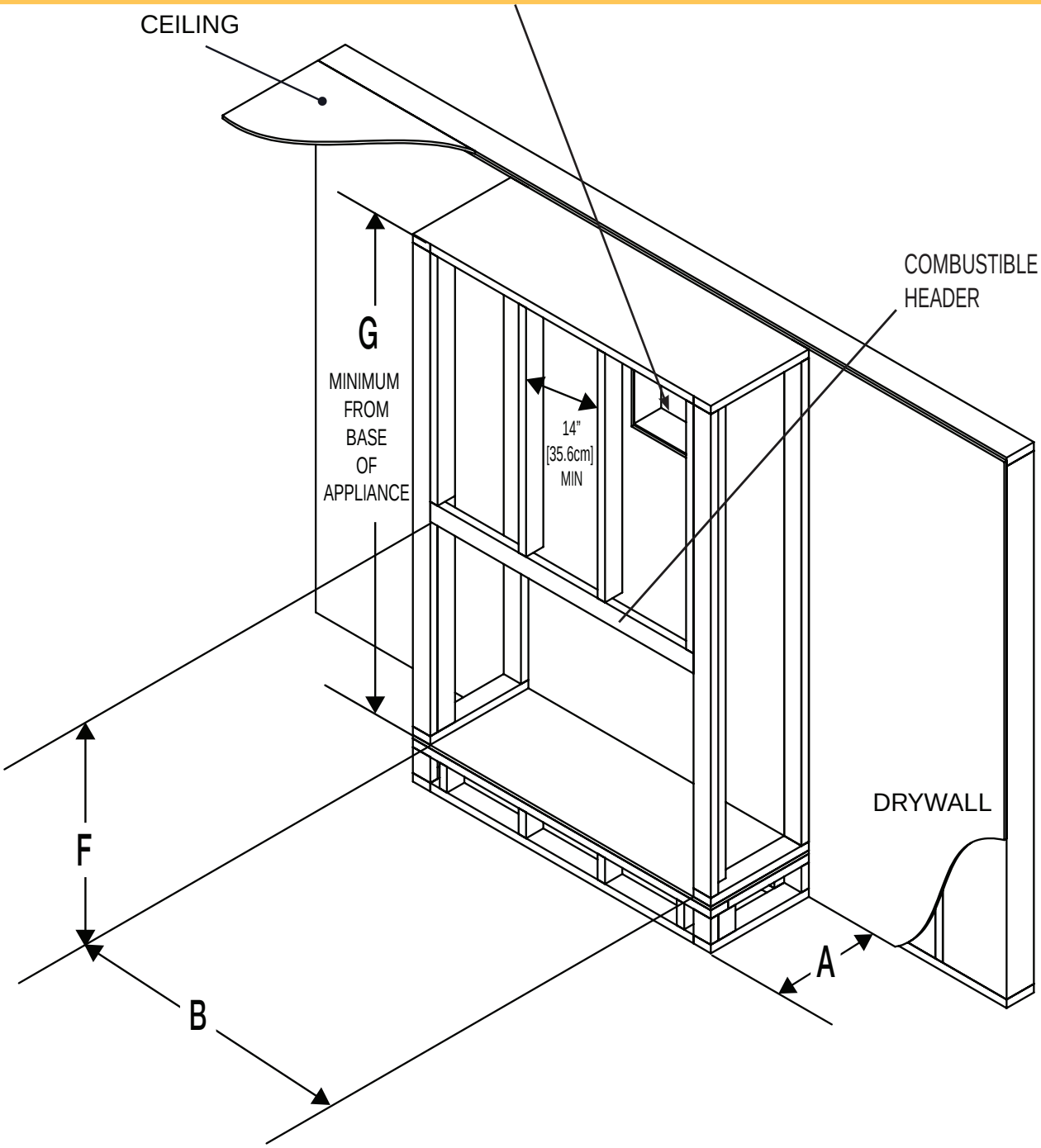

	BLP42	BLP46
B	42 1/2”	47 3/8” (120.3cm)
F	39 3/8” (100cm)	
A	18 9/16” (47.1cm)	18 9/16” (47.1cm)
G	56” (142.2cm)	

nish framing

9.3 recessed

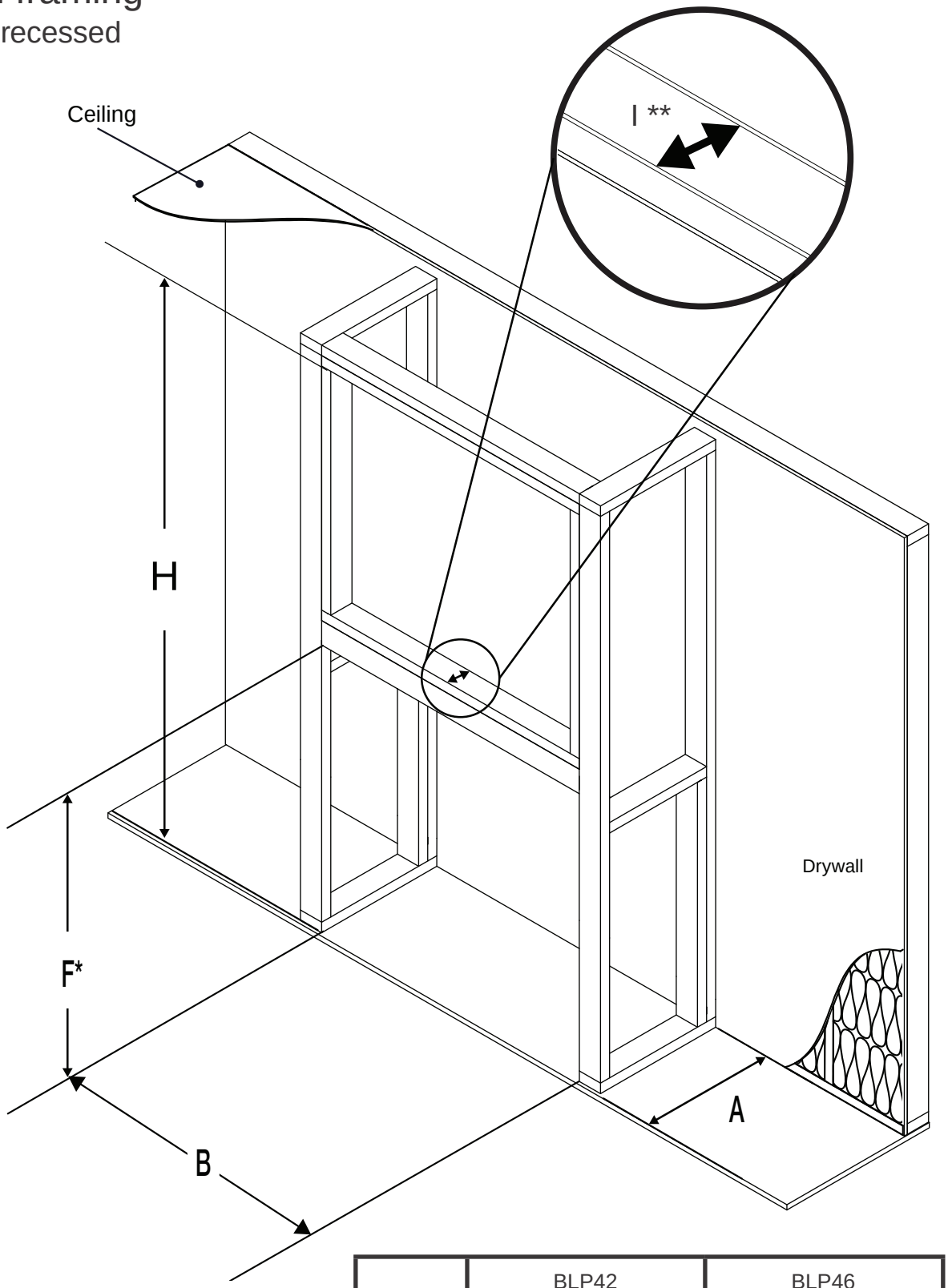

	BLP42	BLP46
F	39 3/8” (100cm)	
A	18 9/16” (47.1cm)	
B	42 1/2”	47 3/8” (120.3cm)
H	84” (213cm)	
I	3 1/2” (89mm)	

* Allow for finished floor and hearth thickness when setting these dimensions.
** 2” x 4” frame can be “backed” with 3/4” ply to support TV mounting hardware.

9.4 minimum clearance to combustible enclosures

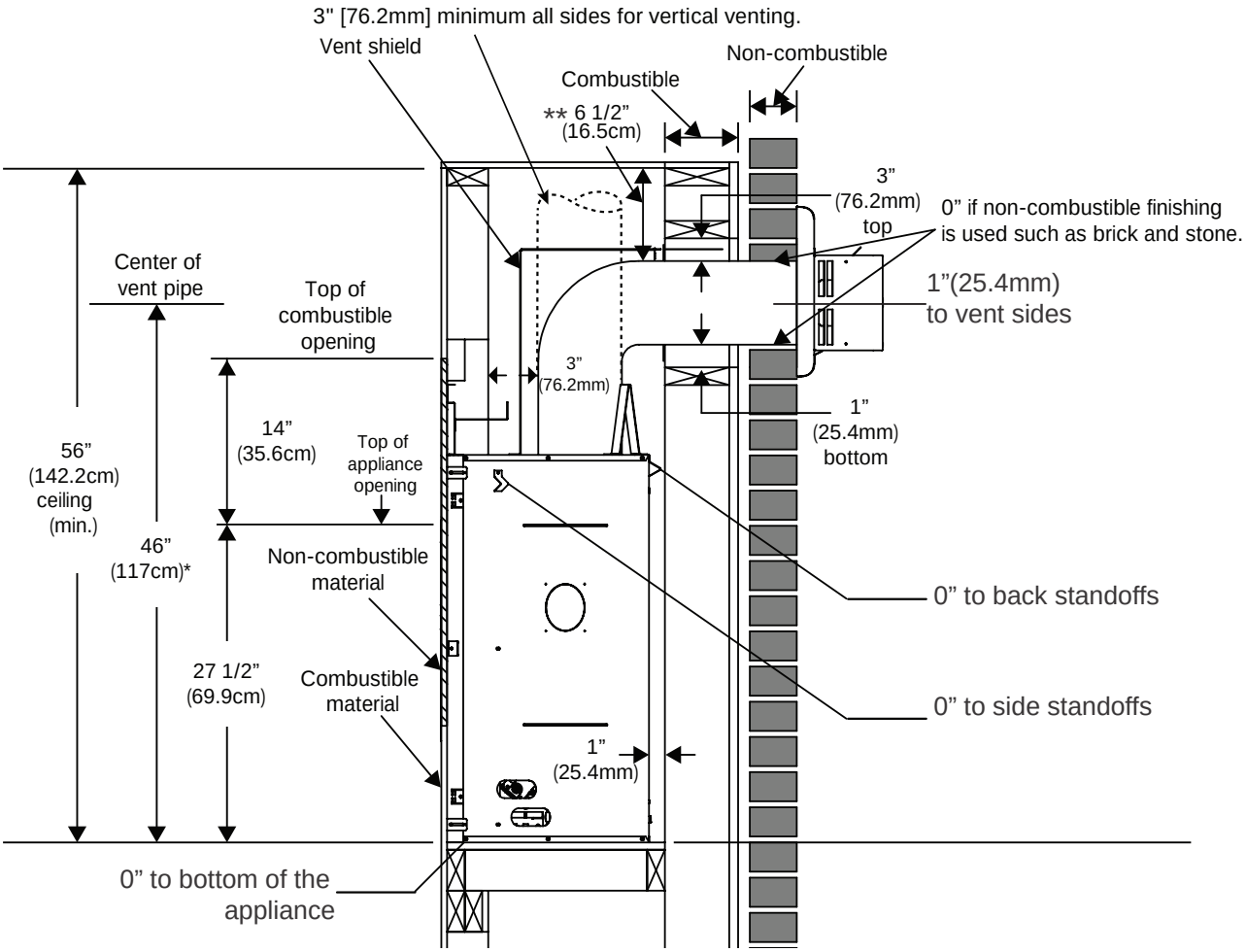

note:
The vent shield is telescopic and must be adjusted to shield the full depth of the combustible wall penetration.

* See "venting requirements" and "venting installation" sections.

** Clearances within the enclosure may be higher, see "minimum framing dimensions" section.

9.5 alcove enclosure

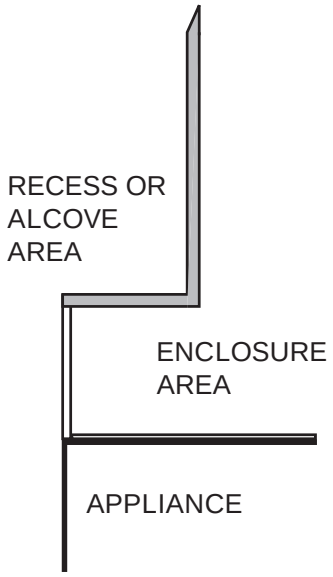

note:
Recesses or alcoves above the appliance must be made with non-combustible material and regular minimum clearances, as defined for combustible materials, must still be applied.

The recesses or alcoves can be made as deep as desired provided the minimum clearances to combustibles are maintained.

The minimum enclosure volume must be increased by no less than the volume of the recess. This adjustment can be made by increasing any or all of the height, width and depth of the enclosure.

10.0 nishing

⚠ WARNING

- Risk of re!
- Never obstruct the front opening of the appliance.
- The front of the appliance must be nished with any non-combustible materials such as brick, marble, granite, etc., provided that these materials do not go below the speci ed dimension, as illustrated.
- Do not strike, slam, or scratch. Do not operate appliance with glass removed, cracked, or scratched.
- Facing and/or nishing material must never overhang into the appliance opening.
- The glass door assembly is designed to pivot forward when relieving excess pressure that might occur. Finishing or other materials must not be located in the opening surrounding the door as this will interfere with the doors ability to relieve pressure.

10.1 BLP42 log placement

⚠

- Failure to position the logs in accordance with these diagrams or failure to use only logs speci cally approved with this appliance may result in property damage or personal injury.
- Logs must be placed in their exact location in the appliance. Do not modify the proper log positions, since appliance may not function properly and delayed ignition may occur.
- The logs are fragile and should be handled with care.

PHAZER™ logs and glowing embers exclusive to Napoleon, provide a unique and realistic glowing effect that is different in every installation. Take the time to carefully position the glowing embers for a maximum glowing effect. Log colours may vary. During the initial use of the appliance, the colours will become more uniform as colour pigments burn in during the heat activated curing process. Blocked burner ports can cause an incorrect ame pattern.

Driftwood log set (BLP42)

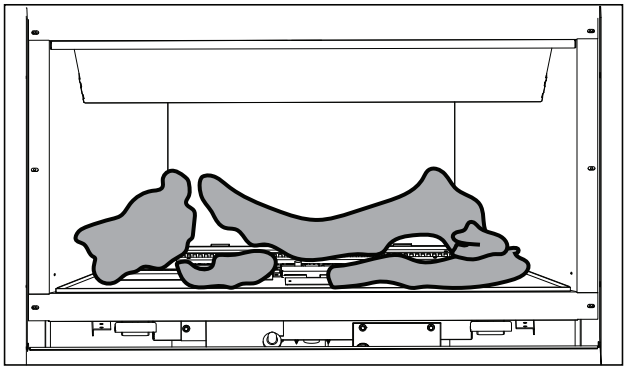

Oak log set (BLP42)

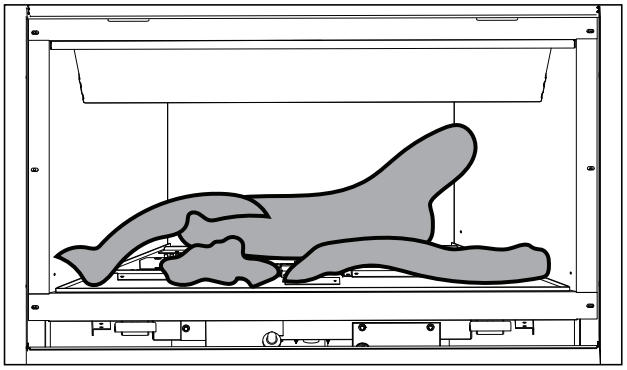

Birch log set (BLP42)

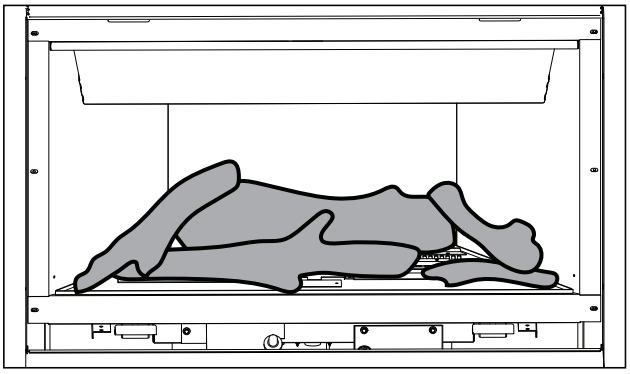

Refer to lea et provided with kit for log placement instructions.

10.2 BLP46 log placement

- Failure to position the logs in accordance with these diagrams or failure to use only logs speci cally approved with this appliance may result in property damage or personal injury.
- Logs must be placed in their exact location in the appliance. Do not modify the proper log positions, since appliance may not function properly and delayed ignition may occur.
- The logs are fragile and should be handled with care.

PHAZER™ logs and glowing embers exclusive to Napoleon, provide a unique and realistic glowing effect that is different in every installation. Take the time to carefully position the glowing embers for a maximum glowing effect. Log colours may vary. During the initial use of the appliance, the colours will become more uniform as colour pigments burn in during the heat activated curing process. Blocked burner ports can cause an incorrect ame pattern.

Driftwood log set (BLP46)

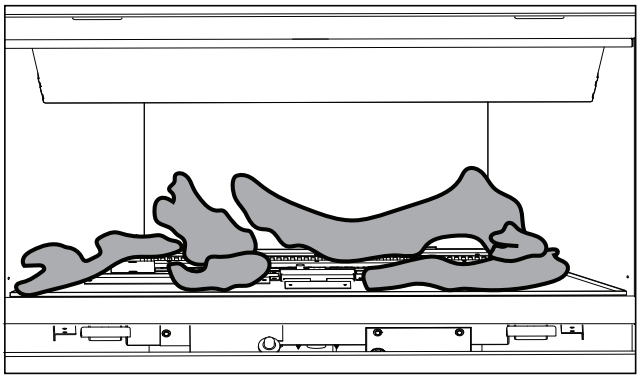

Oak log set (BLP46)

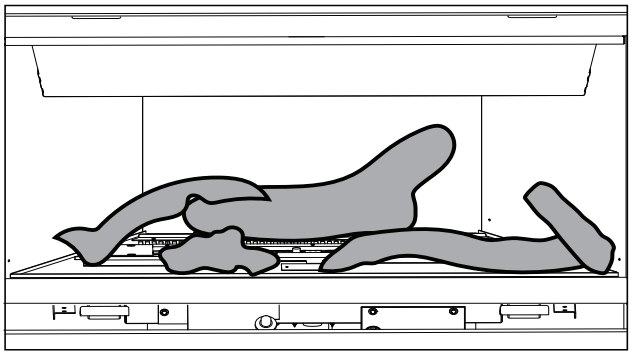

Birch log set (BLP46)

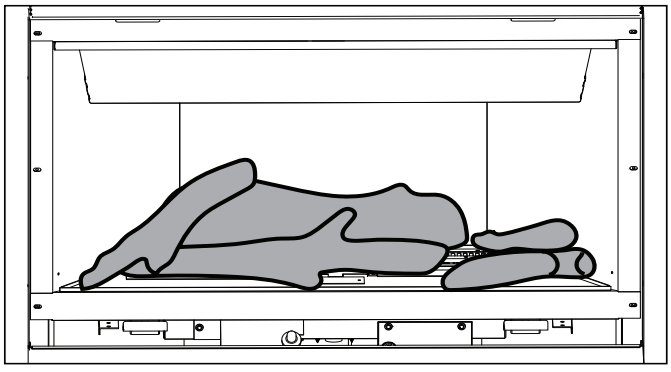

Refer to lea et provided with kit for log placement instructions.

10.3 control cover installation

Slide the back edge of the control cover down between the glass and the door frame. Insert downwards.

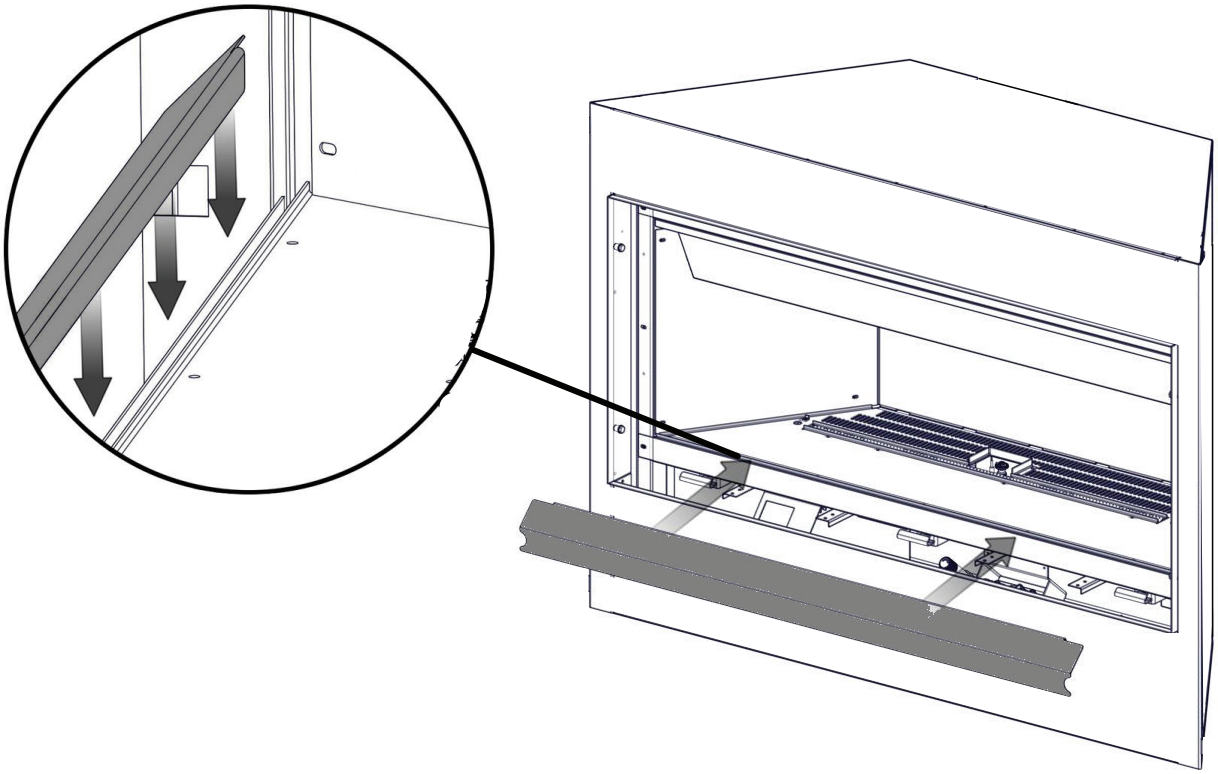

10.4 installing non-combustible board

WARNING

- Non-combustible facing material must not project more than 4” (102mm) from the face of the door (all three sides). If greater projections are desired, increase the clearance to the sides and top by 2” (51mm) for every additional 1” (25mm) of projection. If using an optional surround, the same rule applies, starting from the top of the surround. Ensure clearances are maintained for surround removal, as it must lift off the appliance for maintenance.

	J
BLP42	44” (111.7cm)
BLP46	48” (121.9cm)
	K
BLP42	38 1/2” (97.8cm)
BLP46	42 1/2” (107.9cm)

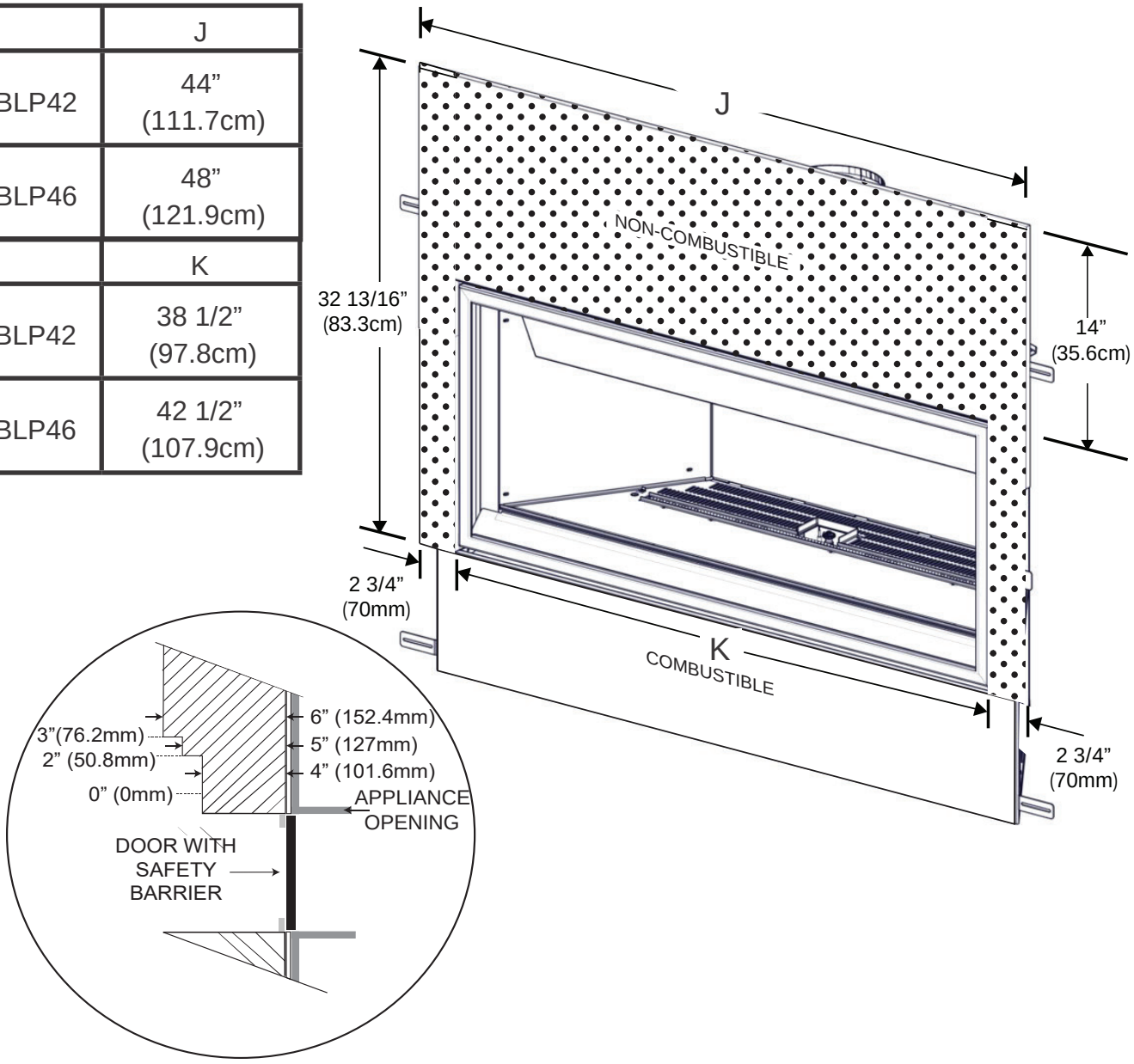

Joint Compound where required
Joint compounds such as Durabond 90 and tapes that are resilient to heat and cracking should be used when taping and mudding seams.

Setting tiles and grouting
We recommend you use tiles with a dry butt joint to be installed using a two-part mortar with an acrylic latex additive, such as Mapei Kerabond/Kerlastic, to allow for slight movement in the normal operation of the appliance. If grout is used between the tiles, a polymer-based grout, such as Mapei Ultracolour plus, is recommended.

Primer/Paint
For a painted surface, use a 100% acrylic latex primer and nish coat. Light coloured paints may discolour.

10.5 minimum combustible mantel clearances

Combustible mantel clearance can vary according to the mantel depth. Use the graph to help evaluate the clearance needed.

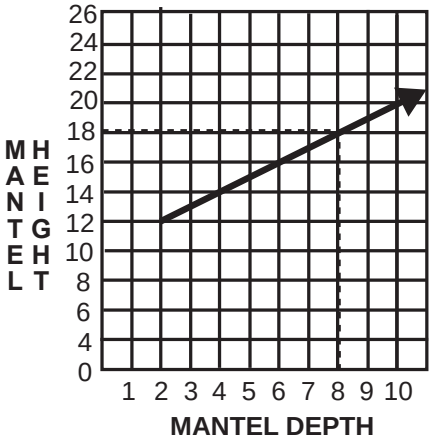

A

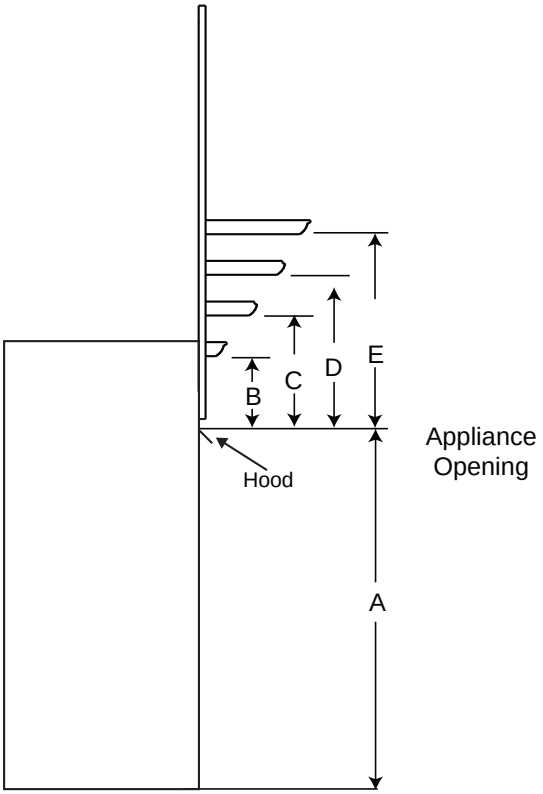

MANTEL DIMENSIONS		
Ref	Height	Depth
A	27 1/2” (69.9cm)	N/A
B	12” (30.5cm)	2" (51mm)
C	14” (35.6cm)	4" (102mm)
D	16” (40.6cm)	6" (152mm)
E	18” (45.7cm)	8" (203mm)

ONLY if the Universal Heat Management System is installed, mantel clearances can be reduced.

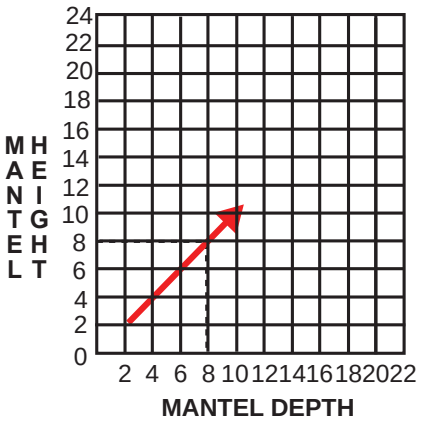

B

MANTEL DIMENSIONS (WITH UHM)		
Ref	Height	Depth*
B	2" (51mm)	
C	4" (102mm)	
D	6" (153mm)	
E	8" (203mm)	

⚠ WARNING

- Risk of re! Reduced mantel clearances are ONLY acceptable for applications with UHM installed.

*Mantel depth must be appropriately sized if placing any valuable items above the replace / mantel (see “clearances around appliance (TV and valuable objects)”).

10.6 clearances around appliance (TV and valuable objects)

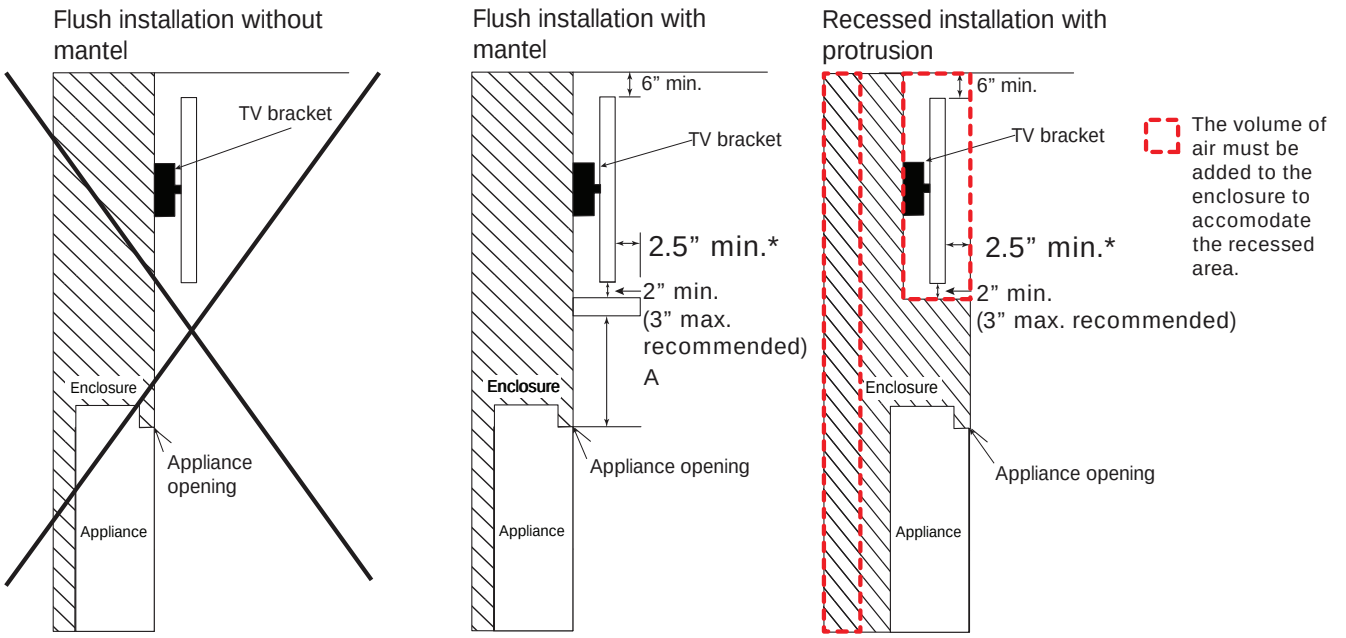

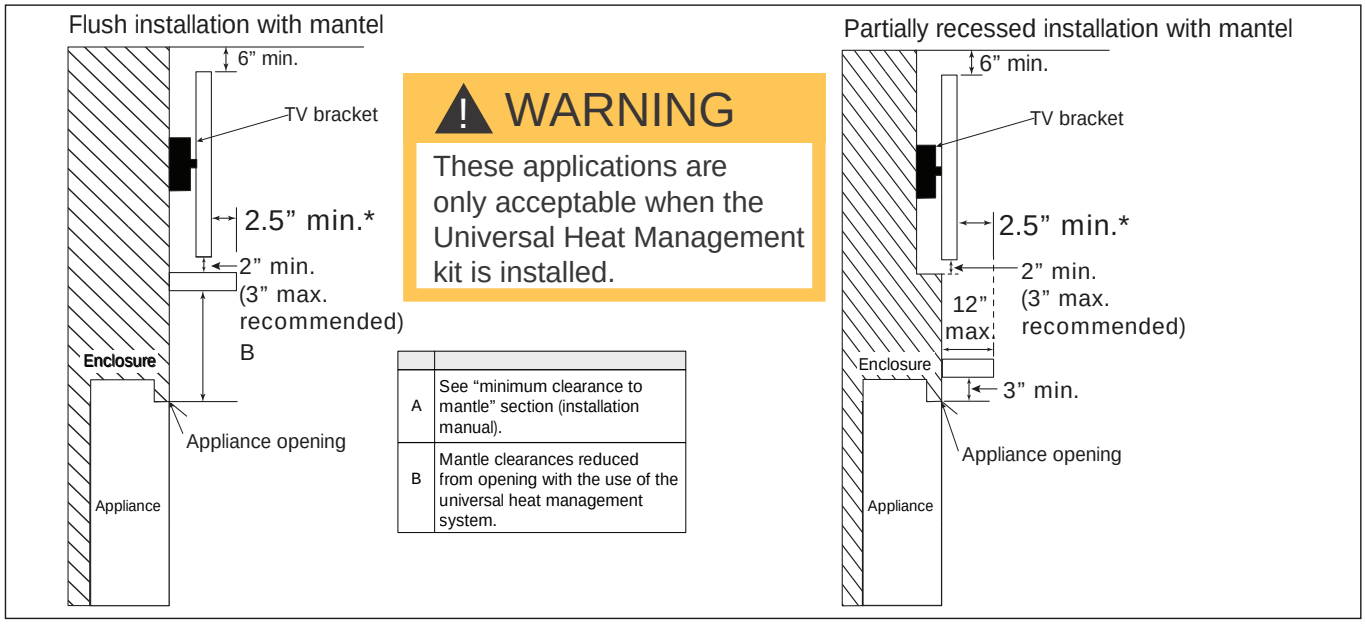

⚠ WARNING

These applications are only acceptable when the Universal Heat Management kit is installed.

A	See “minimum clearance to mantle” section (installation manual).
B	Mantle clearances reduced from opening with the use of the universal heat management system.

* TV applications were tested with the minimum enclosure dimensions and the maximum recess permissible. This data is provided in good faith and is not a guarantee for every application and television. Care and consideration should be taken when planning these installations to ensure the temperatures around the TV meet all manufacturer’s recommended operating temperatures. Increasing the height of the mantel and/or TV above the replace opening, the protrusion of mantel and the volume of the enclosure all have the effect of reducing the temperature above the replace. It is always recommended to use the optional heat management kit when considering mounting a television above the replace.

10.7 safety barrier & glass door installation / removal

- Glass may be hot. Do not touch glass until cooled.
- If equipped with door latches that are part of a safety system, they must be properly engaged. Do not operate the appliance with latches disengaged.
- Facing and/or nishing materials must not interfere with air ow through air openings, louvre openings, operation of louvres, or doors/access for service. Observe all clearances when applying combustible materials.
- Before door is removed, turn the appliance off and wait until appliance is cool to the touch. Doors are heavy and fragile so handle with care.

A barrier designed to reduce the risk of burns from the hot viewing glass is provided with the appliance and must be installed.

Before the glass door can be removed, the safety barrier must be removed. Lift the safety barrier off the four shoulder screws and remove from the appliance.

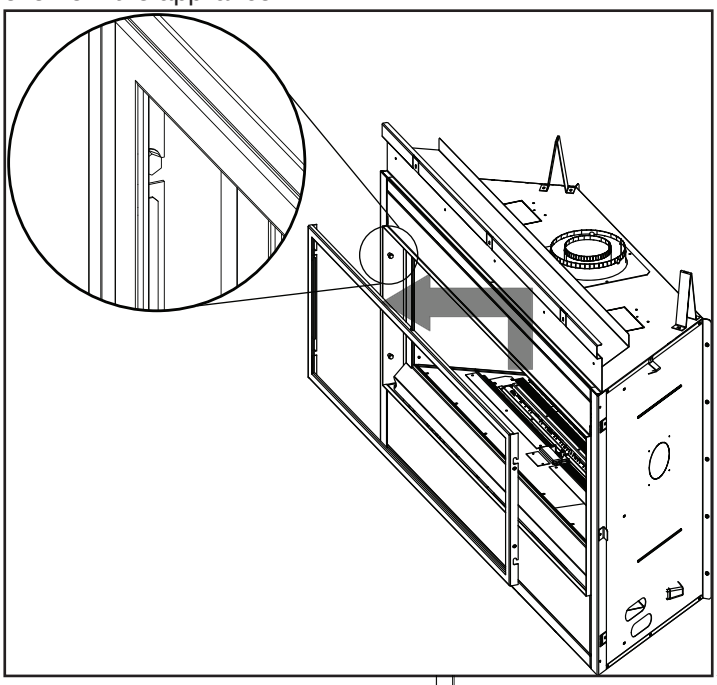

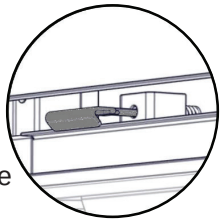

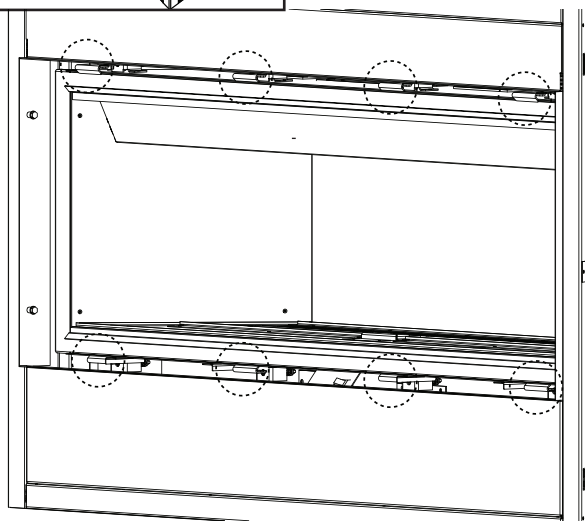

Leave a hand on the glass door during entire door removal. The glass door is secured to the rebox with four (BLP42) or six (BLP46) spring latches. Pull the handles of the latches forward, then lift/ lower the latches out from the door frame to release the door. Next, lift the door up until the bottom edge clears the bottom shoulder screws of the appliance. Carefully grip the top and bottom of the door lifting it off the appliance.

note:

These spring latches make up the spring relief system for the appliance. Ensure the door opens freely and closes sealed.

note:

When mounting the door, ensure there is equal space on both the left and the right side. This allows for easy installation of the front.

Reverse these steps to re-install the door and safety barrier. Ensure safety barrier is installed correctly.

10.8 optional glass media installation

- Clean the glass media prior to installation. Before applying the cleaned glass, ensure that it is dry.
- Do not change or substitute the glass media material provided with this appliance. If replacing, use only the replacement glass media available from your local authorized dealer / distributor.
- Glass media over the burner must not be more than one layer high. More than one layer over the burner will cause ame lifting and sooting problems.
- Do not place any media (sands or vermiculite) in or around the pilot opening and/or on the burner ports. This will interfere with the pilot operation.

Evenly spread the glass media onto the media tray, covering the burner tube and tray. Ensure no glass media falls into the pilot opening. If this happens, insert a clean bag into your vacuum cleaner and vacuum out the glass media. Replacement glass can be purchased from your local dealer / distributor.

note:
Do not use more media than what was certi ed with the appliance.

Cleaning Glass Media

Glass media may have a ne oil residue that needs to be cleaned prior to installation. Clean the glass with mild dish soap, drain, rinse thoroughly and dry before placing over the burner.

note:
Care must be taken to ensure glass media are kept clear of the pilot area on the media tray and are not interfering with the pilot operation.

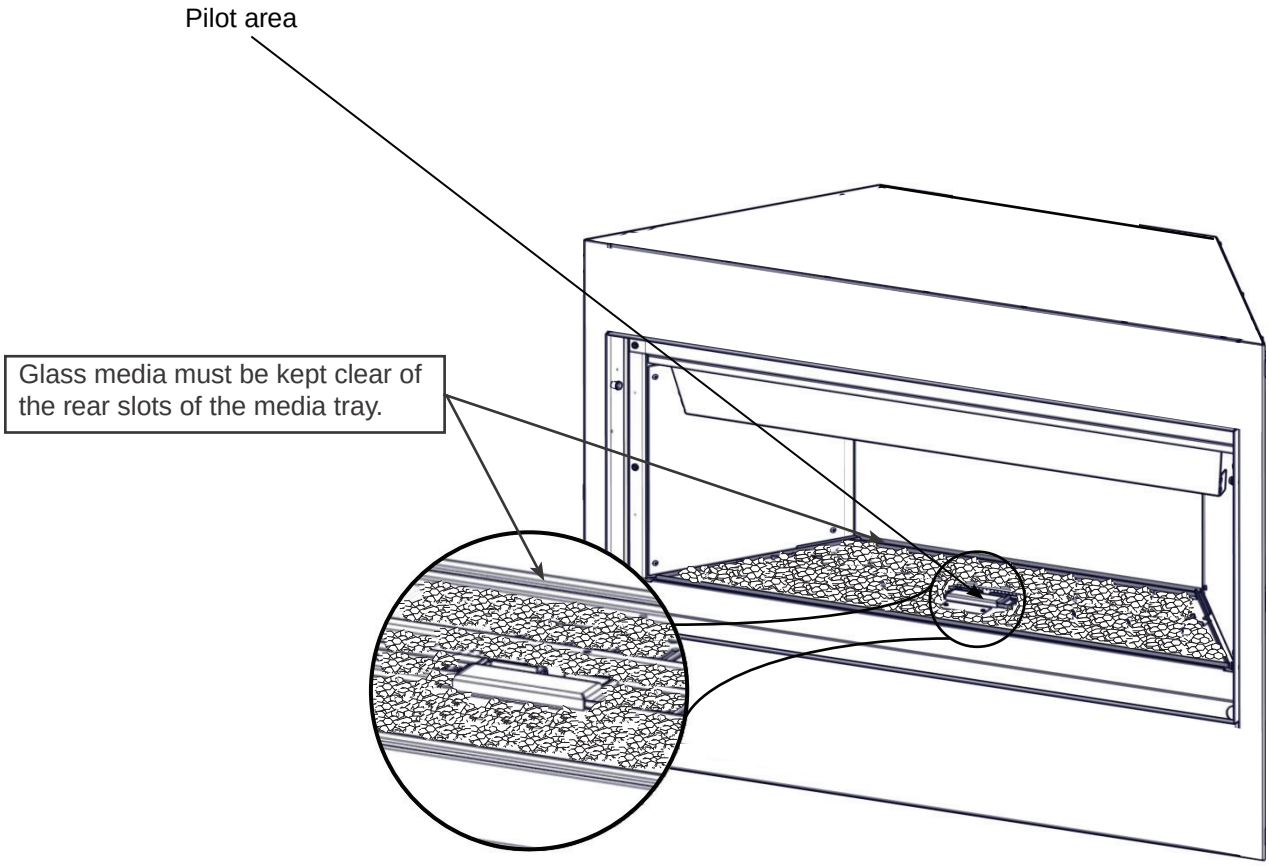

10.9 night light replacement

Your appliance comes equipped with our Night Light ™. The light has been pre-wired and can be controlled from the remote control.

It is recommended that the Night Light ™ be in the “OFF” position when the appliance is on.

In the event the lamp or lens needs to be replaced:

- Unplug the appliance from power.
- Remove the 4 screws that secure the lens frame. This frame retains the glass lens.
- The lamp can now be accessed. It will pull straight out of the socket.

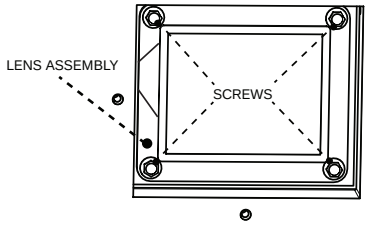

FIREBOX TOP

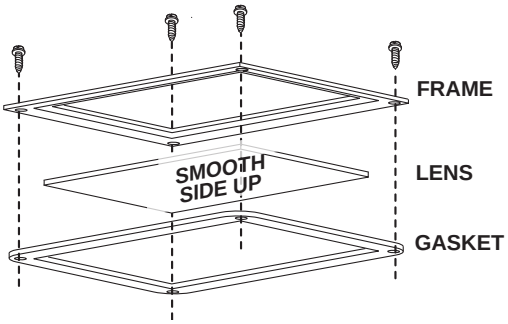

note:

Do not handle the lamp (bulb) with bare fingers as it may be hot. Use a clean, dry cloth for protection.

- Replace the lamp with Wolf Steel parts only, as lamp and lens are special “high temperature” products.
- When re-installing, ensure integrity of gasket seal.

note:

Do not over-tighten the screws, as this could break the lens.

THE FIREBOX MUST BE SEALED.

10.10 blower replacement

⚠ WARNING

- Ensure the appliance is completely cool before starting installation.
- To avoid danger of suffocation, keep the packaging bag away from babies and children. Do not use in cribs, beds, carriages or play pens. This bag is not a toy. Knot before throwing away.

A. Remove the safety barrier by lifting it up and off of the appliance.
B. Remove the door from the appliance by releasing the door latches.
C. Remove cover plates (Fig. 1).

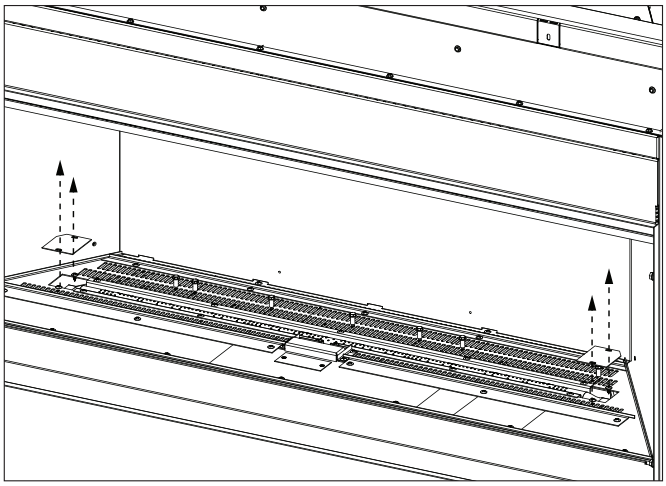

(Fig. 1)

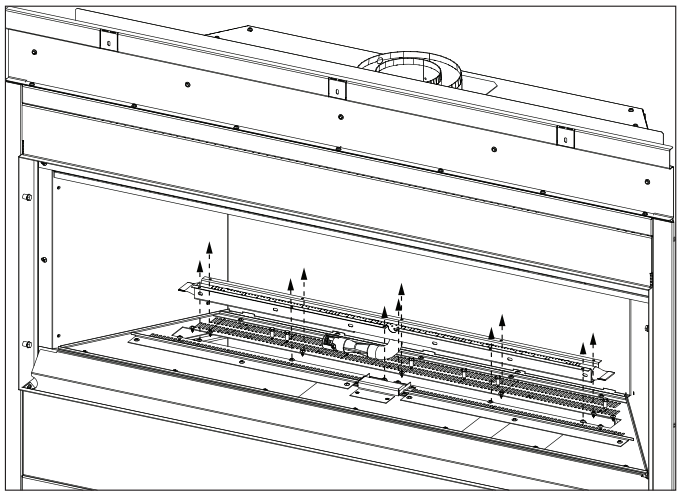

(Fig. 2)

D. Remove burner assembly (Fig. 2).
E. Remove media tray (Fig. 3).
F. Remove access plate (Fig. 4).
G. Disconnect the wire harness connectors.
H. Remove screw securing blower bracket then slide blower assembly to the left and remove (Fig. 5).
I. Replace with new blower.

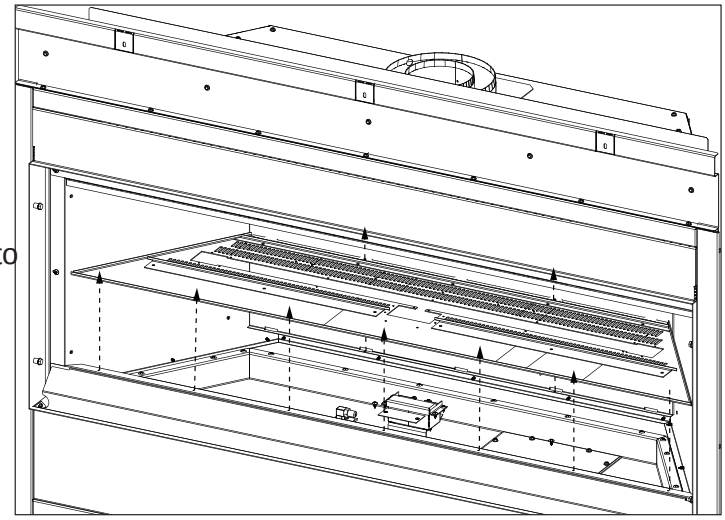

(Fig. 3)

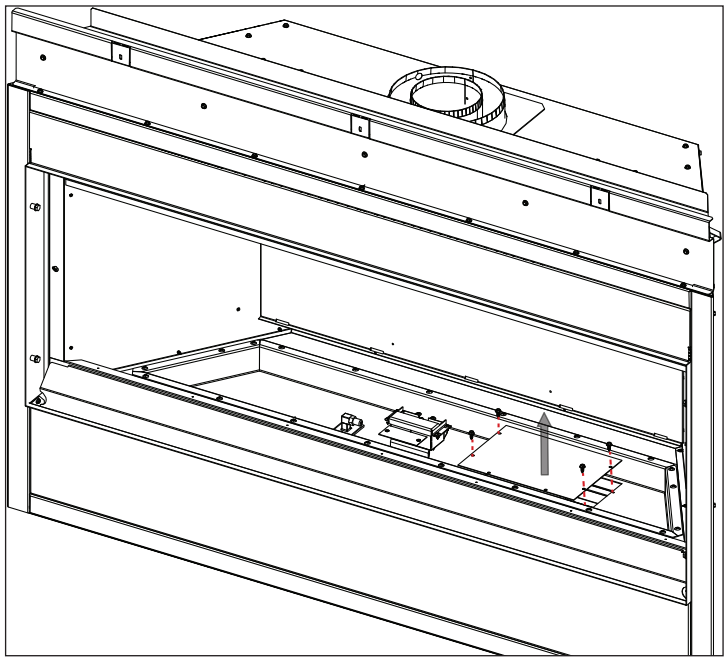

(Fig. 4)

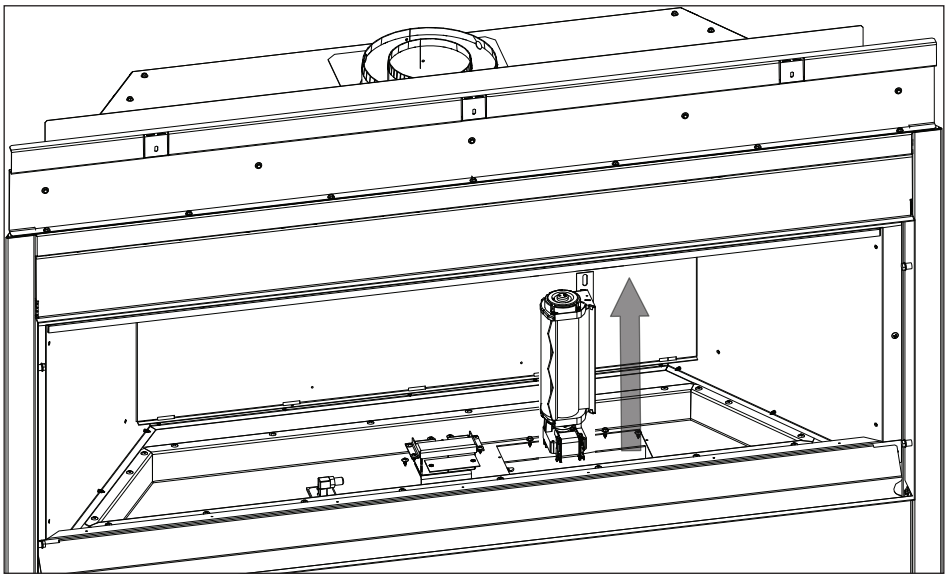

(Fig. 5)

11.0 adjustments

11.1 restricting vertical vents

Vertical installations may display a very active ame. If this appearance is not desirable, the vent exit must be restricted using a restrictor vent kit. Refer to the “replacement parts” section of the owner’s manual for the appropriate kit. This will reduce the velocity of the exhaust gases, slowing down the ame pattern and creating more traditional gentle ame appearance. Speci c instructions are included with the kit.

11.2 venturi adjustment

note:

An air shutter access plate has been provided for initial ame appearance setup. It becomes more dif cult to adjust once the appliance has been nished.

This appliance has an air shutter that has been factory set open according to the chart below:

Regardless of venturi orientation, closing the air shutter will cause a more yellow ame, but can lead to carbonization. Opening the air shutter will cause a more blue ame, but can cause ame lifting from the burner ports. The ame may not appear yellow immediately; allow 15 to 30 minutes for the nal ame colour to be established.

AIR SHUTTER ADJUSTMENT MUST ONLY BE DONE BY A QUALIFIED INSTALLER!

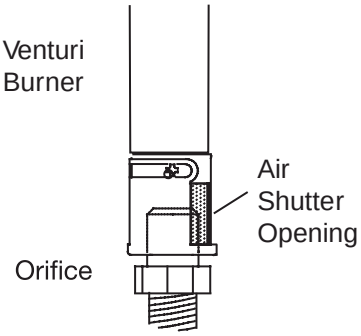

note:

It is important that the ori ce is securely inserted into the venturi.

VENTURI ADJUSTMENT CHART	
NG	1/16" (1.6mm)
P	1/4" (6.4mm)

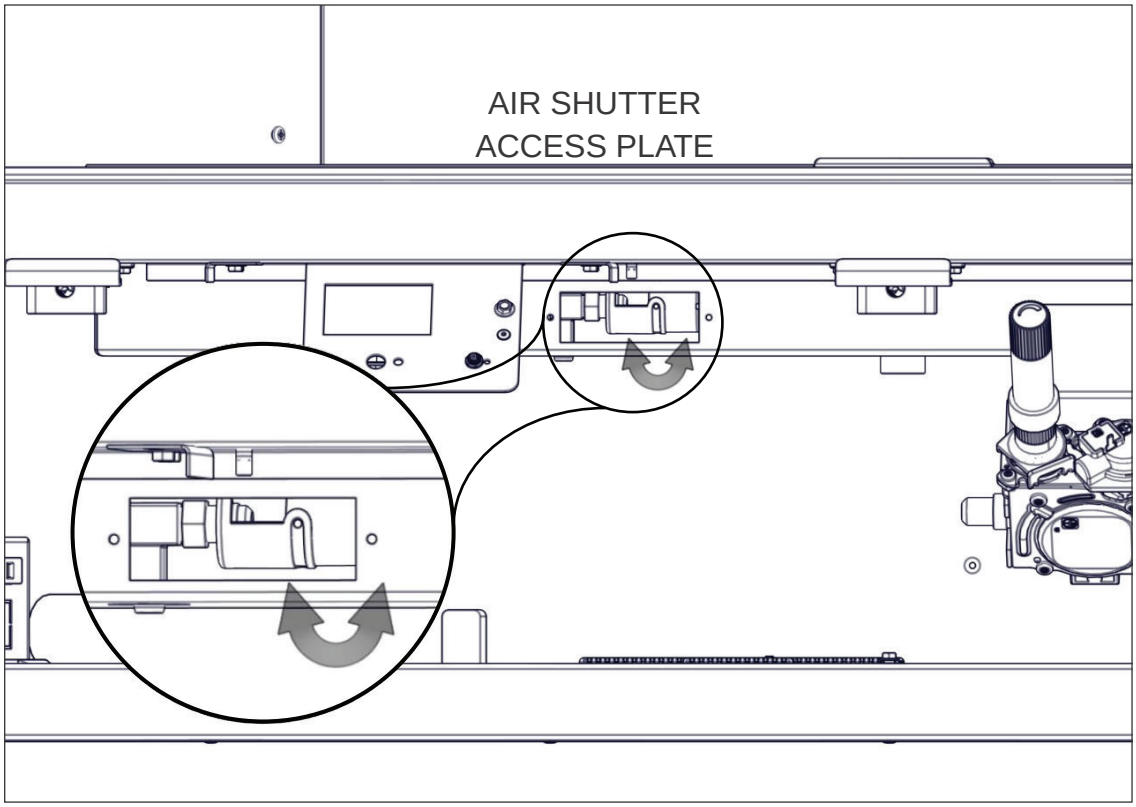

11.3 pilot burner adjustment

Adjust the pilot screw to provide properly sized ame. Turn in a clockwise direction to reduce the gas ow.

Check Pressure Readings:

Inlet pressure can be checked by turning screw (A) counter-clockwise 2 or 3 turns and then placing pressure gauge tubing over the test point. Gauge should read as described on the chart below. Check pressure with main burner operating on “HI”.

Outlet pressure can be checked the same as above using screw (B). Gauge should read as described on the chart below. Check pressure with main burner operating on “HI”.

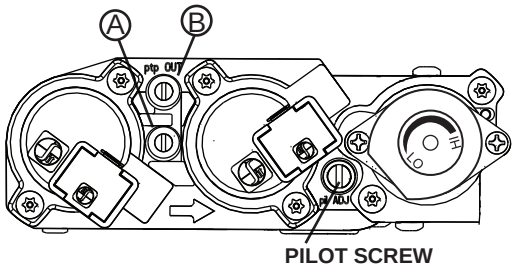

After taking pressure readings, be sure to turn screws clockwise rmly to reseal. Do not overtorque.

Leak test with a soap and water solution.

Prior to pilot adjustment, ensure that the pilot assembly has not been painted. If overspray or painting of the pilot assembly has occurred remove the paint from the pilot assembly, or replace. Fine emery cloth or a synthetic scrub pad (such as Scotch-Brite™) can be used to remove the paint from the pilot hood, electrode and ame sensor.

Pressure	Natural Gas (inches)	Natural Gas (millibars)	Propane (inches)	Propane (millibars)
Inlet	*7” (minimum 4.5”)	17.4mb (minimum 11.2mb)	13” (minimum 11”)	32.4mb (minimum 27.4mb)
Outlet	3.5”	8.7mb	10”	24.9mb

*Maximum inlet pressure not to exceed 13”

11.4 ame characteristics

It’s important to periodically perform a visual check of the pilot and burner flames. Compare them to the illustration provided. If any flames appear abnormal, call a service person.

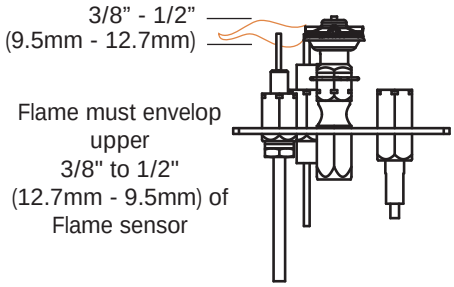

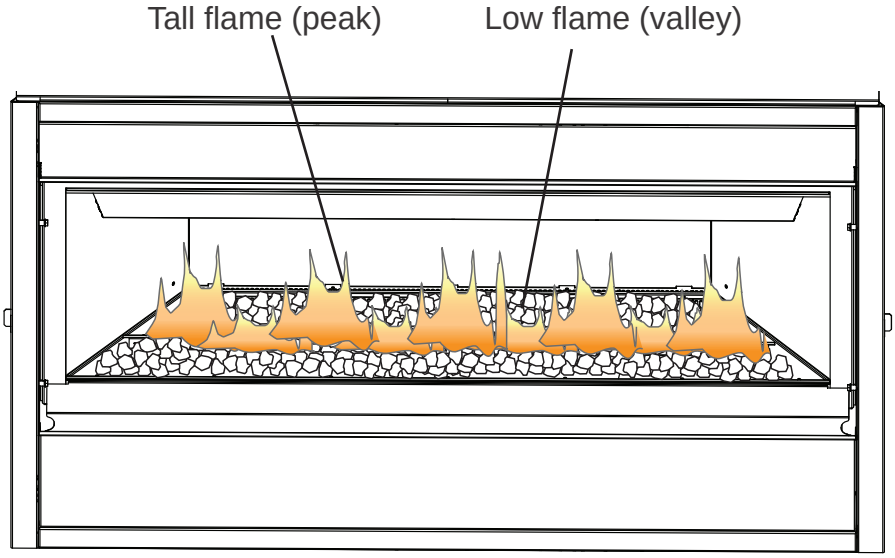

12.0 maintenance

⚠ WARNING

- Turn off the gas and electrical power before servicing the appliance.
- Appliance may be hot. Do not service until appliance has cooled.
- Do not use abrasive cleaners on glass.
- Do not paint the pilot assembly.

This appliance and its venting system should be inspected before use and at least annually by a quali ed service person. The following suggested checks should be performed by a quali ed technician. The appliance area must be kept clear and free of combustible materials, gasoline, or other ammable vapors and liquids. The ow of combustion and ventilation air must not be obstructed.

note:

Caution: Label all wires prior to disconnection when servicing controls. Wiring errors can cause improper and dangerous operation. Verify proper operation after servicing.

1. In order to properly clean the burner and pilot assembly, remove the logs, rocks and/or glass to expose both assemblies.
2. Keep the control compartment, media, burner, air shutter opening and the area surrounding the appliance clean by vacuuming or brushing, at least once a year.
3. Check to see that all burner ports are burning. Clean out any of the ports which may not be burning or are not burning properly.
4. Check to see that the pilot ame is large enough to engulf the ame sensor and/or thermocouple / thermopile as well as it reaches the burner.
5. If your appliance is equipped with a safety barrier, cleaning may be necessary due to excessive lint / dust from carpeting, pets, etc. simply vacuum using the brush attachment.
6. If your appliance is equipped with relief doors, ensure the system performs effectively. Check that the gasket is not worn or damaged. Replace if necessary.
7. Replace the cleaned logs, rocks or glass. Failure to properly position the media may cause carboning which can be distributed in the surrounding living area, inside the rebox and on exterior surfaces surrounding vent termination.
8. Check to see that the main burner ignites completely on all ports when turned on. A 5 to 10 second total light-up period is satisfactory. If ignition takes longer, consult your local authorized dealer / distributor.
9. Visually inspect the appliance for carbon build up. Using a small whisk or brush, brush off the carbon and vacuum up or sweep into garbage.
10. This step is not applicable for Vent Free appliances: Check to see that the appliance is venting correctly. Ensure chimney system is safe and unobstructed. (If for any reason the vent air intake system is disassembled, re-install and re-seal per the instructions provided for the initial installation).

12.1 care of glass

⚠ WARNING

- Do not clean glass when hot! Do not use abrasive cleaners to clean glass.

Buff lightly with a clean dry soft cloth to remove accumulated dust or ngerprints. Clean both sides of the glass after the rst 4 hours of operation with an ammonia-free glass cleaner.

note:

Vinegar-based glass cleaners have demonstrated an ability to provide a clean, streak free glass surface.

Thereafter, clean as required. If the glass is not kept clean permanent discoloration and / or blemishes may result. Contact you local authorized dealer / distributor for complete cleaning instructions.

Razor blades, steel wool, or other metallic objects must not be used on both surfaces of the glass. Doing so can remove a thin layer of metal from the razor blades, steel wool, or other metallic objects that may then be deposited onto the coating. This can result in a discoloured stain or scratch-like mark. More importantly, this can scratch the glass surface, thereby reducing its strength.

Do not operate the appliance with broken glass, as leakage of ue gases may result.

Contact your local authorized dealer / distributor for complete cleaning instructions.

If the glass should ever crack or break while the re is burning, do not open the door until the re is out. Do not operate the appliance until the glass has been replaced. Contact you local authorized dealer / distributor for replacement parts. DO NOT SUBSTITUTE MATERIALS.

This appliance is factory equipped with 4mm tempered glass. Use only replacement parts as supplied by the appliance manufacturer. DO NOT SUBSTITUTE MATERIALS.

12.2 annual maintenance

WARNING

- Annual maintenance should be performed by a quali ed service technician
- The rebox becomes very hot during operation. Let the appliance cool completely or wear heat resistant gloves before conducting service.
- Never vacuum hot embers.
- Do not paint the pilot assembly

- This appliance will require maintenance which should be planned on an annual basis.
- Service should include cleaning, battery replacement, venting inspection and inspection of the burner, media, and rebox. Refer to the door removal section and remove the door as instructed.
- Carefully remove media if necessary (logs, glass, brick panels, etc.).
- Using a vacuum with soft brush attachment, gently remove any dirt, debris, or carbon build up from the logs, rebox, and burner. For glass media, follow the installation instructions for pre-cleaning.
- Gently remove any build-up on the pilot assembly including thermopile, thermocouple, ame sensor, and igniter (if equipped).

note:

Clean ame sensor using a ne emery cloth or a synthetic scrub pad (such as Scotch-Brite™) to remove any oxides. Clean the pilot assembly using a vacuum with a soft brush attachment. It is important that the pilot assembly is not painted.

- Inspect all accessible gaskets and replace as required.
- If equipped with a blower, access the blower and clean using a soft brush and vacuum.
- Re-assemble the various components in reverse order.
- Inspect the relief system. The appliance relieves through the main glass door or through the aps on the rebox top. Ensure they open freely, and close sealed.
- Check the gas control valve pilot and Hi / Lo knobs move freely, if equipped. Replace if any stiffness in movement is experienced.
- Check for gas leaks on all gas connections up and downstream from the gas valve including pilot tube connections.

12.3 glass / door replacement

WARNING

- Do not use substitute materials.
- Glass may be hot. Do not touch glass until cooled.
- Care must be taken when removing and disposing of any broken door glass or damaged components. Be sure to vacuum up any broken glass from inside appliance before operation.
- Do not strike, slam, or scratch. Do not operate appliance with glass removed, cracked, broken, or scratched.

Replacement glass/frame assembly shall be replaced as a complete unit as supplied by the appliance manufacturer.

13.0 replacement parts

⚠ WARNING

- Failure to position the parts in accordance with this manual or failure to use only parts speci cally approved with this appliance may result in property damage or personal injury.

Contact your dealer for questions concerning prices and policies on replacement parts. Normally, all parts can be ordered through your Authorized dealer / distributor.

For warranty replacement parts, a photocopy of the original invoice will be required to honour the claim.
When ordering replacement parts always give the following information:

- Model & Serial Number of appliance
- Installation date of appliance
- Part number
- Description of part
- Finish

Parts, part numbers, and availability are subject to change without notice.

Parts identi ed as stocked will be delivered within 2 to 5 business days for most delivery destinations.

Parts not identi ed as stocked will be delivered within a 2 to 4 week period, for most cases.

Parts identi ed as ‘SO’ are special order and can take up to 90 days for delivery.

13.1 BLP42 overview

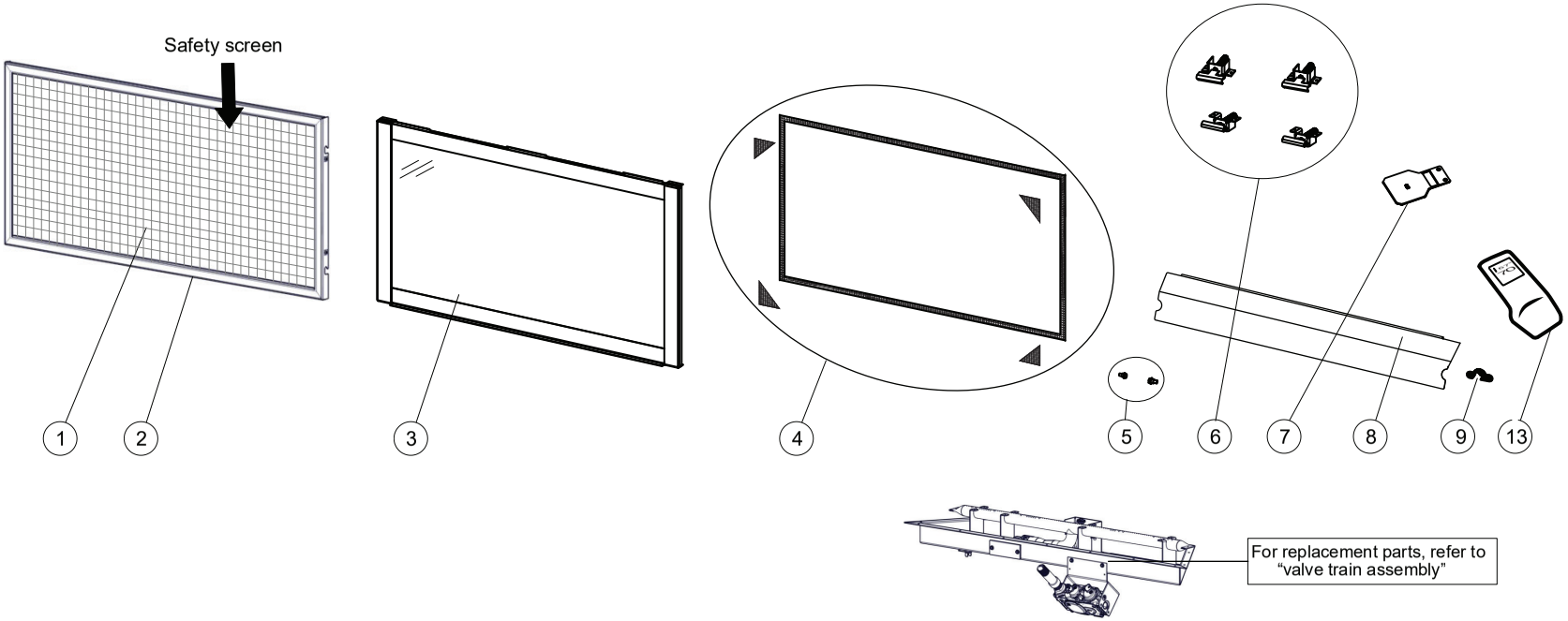

Items may not appear exactly as illustrated.

Ref. No.	Part Number	Description	Stocked
1	W565-0343-SER	Safety screen	Yes
2	W010-4978-SER	Safety barrier assembly	Yes
3	W010-4923-SER	Door assembly	
4	W562-0009	Door gasket kit	Yes
5	W570-0192	Shoulder screw (x2)	
6	W010-3554	Door latch (x4)	
7	RP4	4" Restritcor plate	Yes

Ref. No.	Part Number	Description	Stocked
8	W200-0842-SER	Control cover	
9	W385-2010	Napoleon logo	Yes
10	W405-0087	Light assembly	
11*	W300-0067	Ceramic glass lens	
12*	W062-0051	Blower	
13	W660-0126-SER	PF2 Remote	
14*	W750-0159	Blower wire harness	
15*	W387-0006	Halogen bulb	

13.2 BLP42 valve train assembly

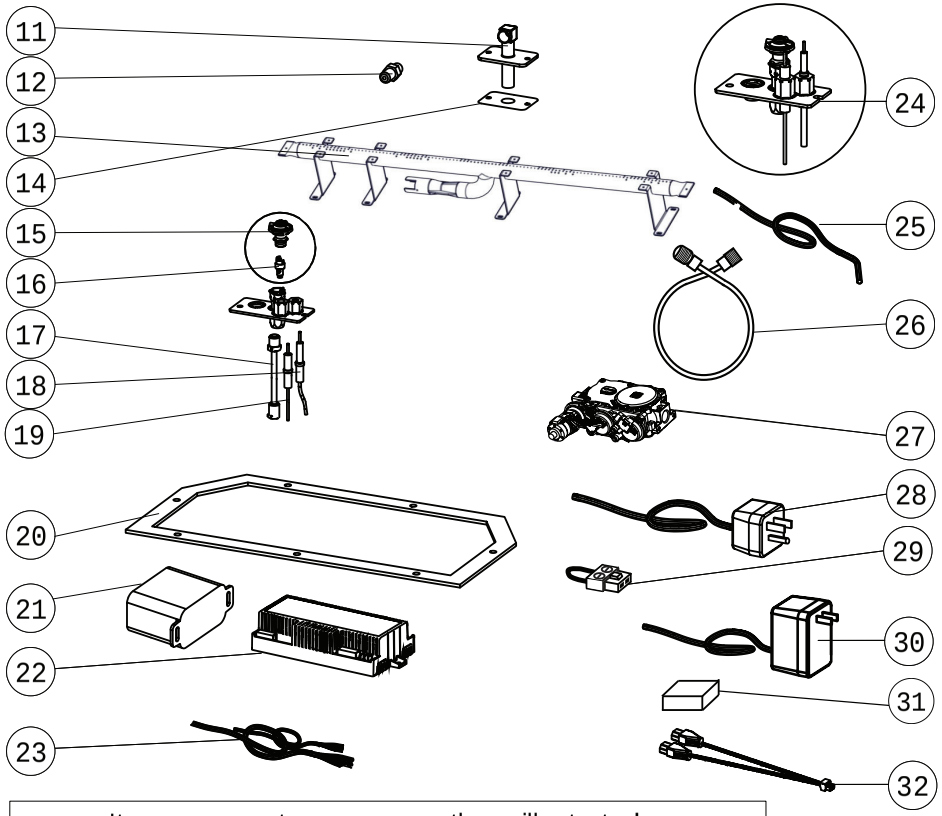

Items may not appear exactly as illustrated.

Ref. No.	Part Number	Description	Stocked
11	W432-0103	Manifold flex pipe	
12	W456-0045	Burner orifice #45 (NG)	Yes
12	W456-0055	Burner orifice #55 (P)	Yes
13	W100-0299	Burner assembly	
14	W290-0157	Manifold gasket	
15	W335-0039	Pilot hood	Yes
16	W455-0070	Pilot orifice #62 (NG)	Yes
16	W455-0068	Pilot orifice #35 (P)	Yes
17	W720-0062	Pilot tube (w/ fittings)	Yes
18	W240-0013	Electrode (w/ wire)	Yes
19	W245-0025	Thermosensor	
20	W290-0927	Valve train gasket	
21	W350-0655	Battery housing	

Ref. No.	Part Number	Description	Stocked
22	W190-0177-SER	Control board	Yes
23	W750-0268	Battery housing wire harness	
24	W010-2763	Pilot assembly (NG)	
24	W010-2808	Pilot assembly (P)	
25	W750-0276	Proflame 2 wire harness	
26	W175-0217	Flex connector w/ valve	Yes
27	W725-0056	Valve (NG)	Yes
27	W725-0057	Valve (P)	Yes
28	W750-0294	Power cord wire (18”)	
29	W175-0355	Female X4 ON/OFF jumper	
30	W707-0019	Transformer	
31	W190-0090	Bluetooth control module	
32	W750-0358	Light / fan pigtail	

13.3 BLP42 logs

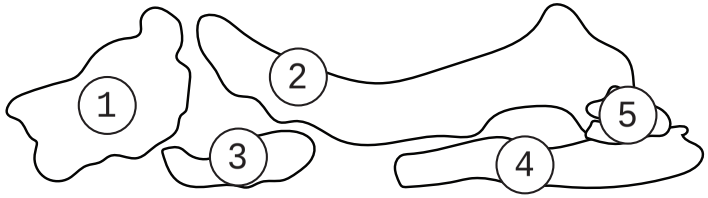

DLKBLP42

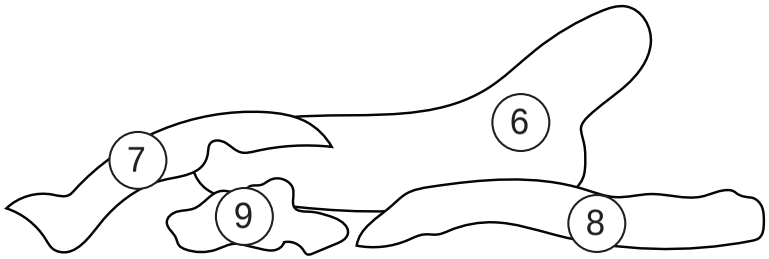

OLKBLP42

Items may not appear exactly as illustrated.

Ref. No.	Part Number	Description	Stocked
1	W135-1029	Rear center log (Log #2)	
2	W135-1030	Rear right log (Log #3)	
3	W135-1032	Front bottom left log (Log #5)	
4	W135-1034	Front center log (Log #7)	
5	W135-1035	Front right log (Log #8)	

Ref. No.	Part Number	Description	Stocked
6	W135-1037	Rear log (Log #1)	
7	W135-1039	Left crossover log (Log #3)	
8	W135-1040	Right crossover log (Log #4)	
9	W135-1041	Left front log (Log #5)	

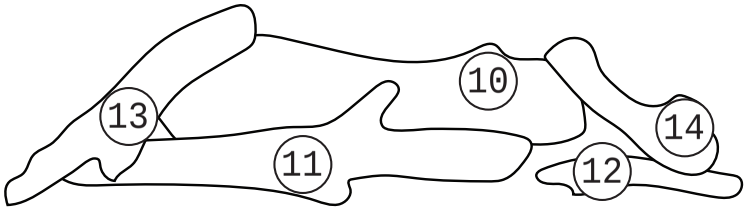

BLKBLP42

Ref. No.	Part Number	Description	Stocked
10	W135-1046	Left rear log (Log #1)	
11	W135-1048	Left front log (Log #3)	
12	W135-1049	Middle front log	
13	W135-1051	Left crossover log (Log #6)	
14	W135-1052	Right crossover log (Log $7)	

13.4 BLP46 overview

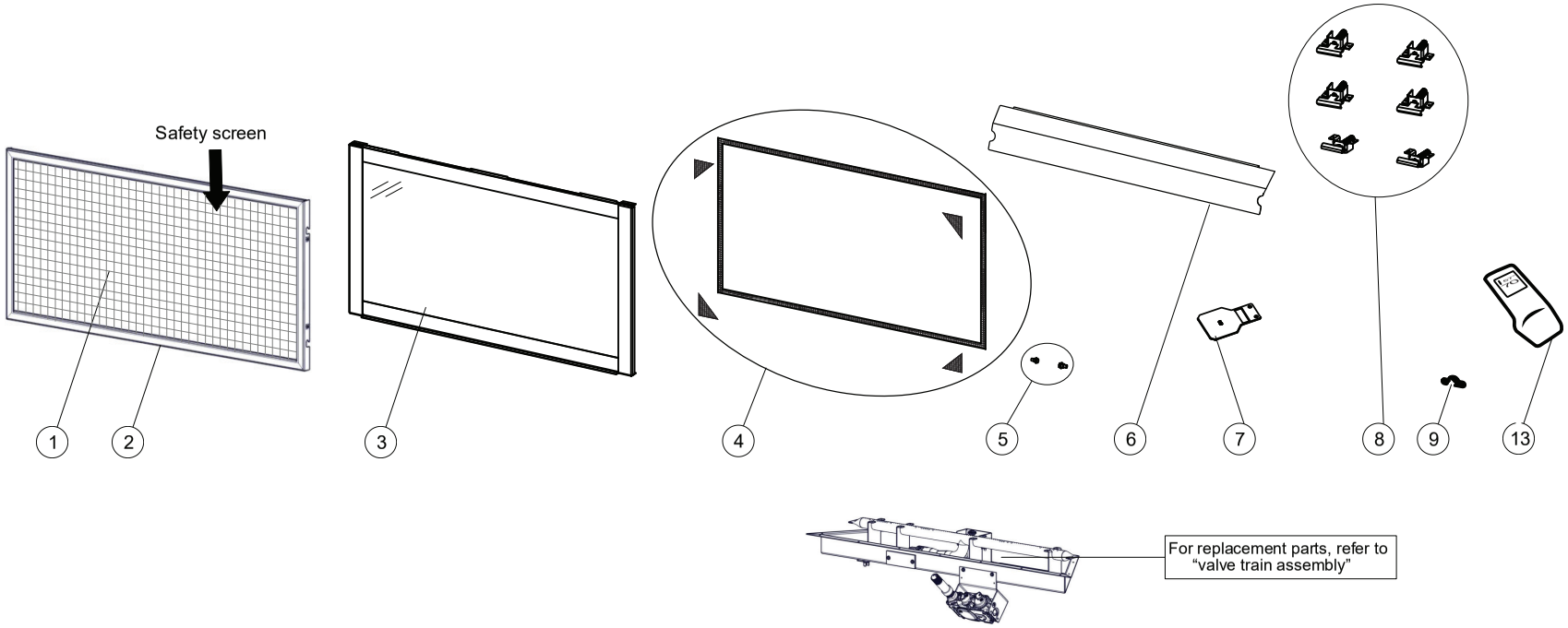

Items may not appear exactly as illustrated.

Ref. No.	Part Number	Description	Stocked
1	W565-0350-SER	Safety screen	Yes
2	W010-6094-SER	Safety barrier assembly	Yes
3	W010-4100-SER	Door assembly	
4	W562-0060	Door gasket kit	Yes
5	W570-0192	Shoulder screw	
6	W200-0663-SER	Control cover	
7	RP4	4" Restrictor plate	Yes

Ref. No.	Part Number	Description	Stocked
8	W010-3554	Door latch	
9	W385-2010	Napoleon logo	Yes
10*	W405-0087	Light assembly	
11*	W300-0067	Ceramic glass lens	
12*	W062-0051	Blower	
13	W660-0126-SER	PF2 Remote	
14*	W750-0159	Blower wire harness	
15*	W387-0006	Halogen bulb	

13.5 BLP46 valve train assembly

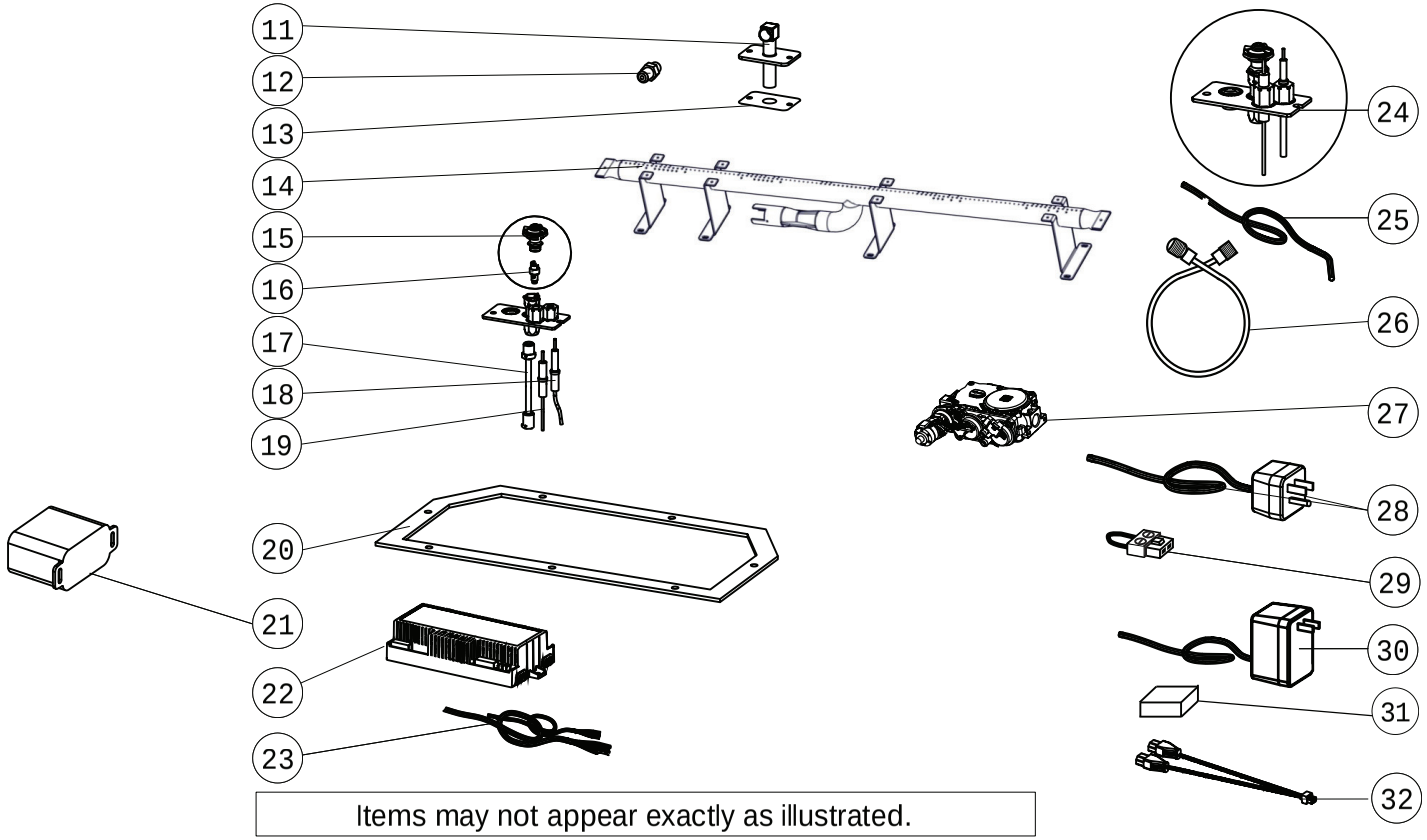

Items may not appear exactly as illustrated.

Ref. No.	Part Number	Description	Stocked
11	W432-0103	Manifold flex pipe	
12	W456-0043	Burner orifice #43 (NG)	Yes
12	W456-0053	Burner Orifice #53 (P)	Yes
13	W290-0157	Manifold gasket	
14	W100-0223-SER	Burner assembly	
15	W335-0039	Pilot hood	Yes
16	W455-0070	Pilot orifice #62 (NG)	Yes
16	W455-0068	Pilot orifice #35 (P)	Yes
17	W720-0062	Pilot tube (w/ fittings)	Yes
18	W240-0013	Electrode (w/ wire)	Yes
19	W245-0025	Thermosensor	
20	W290-0355	Valve train gasket	
21	W350-0655	Battery housing	

Ref. No.	Part Number	Description	Stocked
22	W190-0177-SER	Control board	Yes
23	W750-0268	Battery housing wire harness	
24	W010-2763	Pilot assembly (NG)	
24	W010-2808	Pilot assembly (P)	
25	W750-0276	Proflame 2 wire harness	
26	W175-0217	Flex connector w/ valve	Yes
27	W725-0056	Valve (NG)	Yes
27	W725-0057	Valve (P)	Yes
28	W750-0294	Power cord wire (18”)	
29	W175-0355	Female X4 ON/OFF jumper	
30	W707-0019	Transformer	
31	W190-0090	Bluetooth control module	
32	W750-0358	Light / fan pigtail	

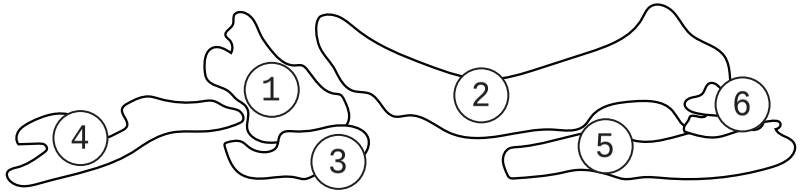

DLKBLP46

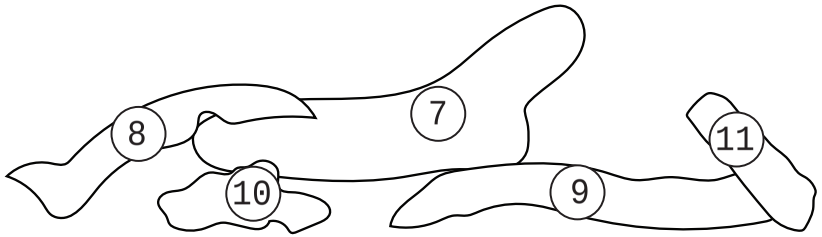

OLKBLP46

Items may not appear exactly as illustrated.

Ref. No.	Part Number	Description	Stocked
1	W135-1029	Rear center log (Log #2)	
2	W135-1030	Rear right log (Log #3)	
3	W135-1032	Front bottom left log (Log #5)	
4	W135-1033	Front top left (Log #6)	
5	W135-1034	Front center log (Lof #7)	
6	W135-1035	Front right log (Log #8)	

Ref. No.	Part Number	Description	Stocked
7	W135-1037	Rear log (Log #1)	
8	W135-1039	Left crossover log (Log #3)	
9	W135-1040	Right crossover log (Log #4)	
10	W135-1041	Left front log (Log #5)	
11	W135-1043	Right front log (Log #7)	

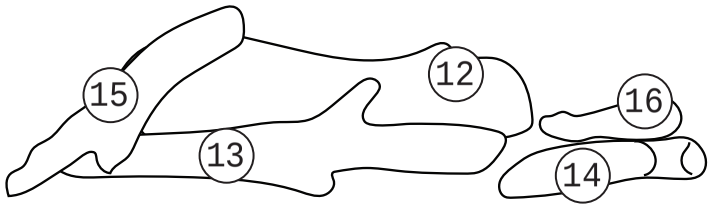

BLKBLP46

Ref. No.	Part Number	Description	Stocked
12	W135-1046	Left rear log (Log #1)	
13	W135-1049	Left front log (Log #3)	
14	W135-1050	Right front log (Log #5)	
15	W135-1051	Left crossover log (Log #6)	
16	W135-1052	Right crossover log (Log #7)	

WARNING

- Always light the pilot whether for the rst time or if the gas supply has run out, with the glass door open or removed.
- Turn off gas and electrical power before servicing the appliance.
- Appliance may be hot. Do not service until appliance has cooled.
- Do not use abrasive cleaners

symptom	problem	test solution
Main burner ame is a blue, lazy, transparent ame. (This is not applicable in outdoor appliances)	Blockage in vent.	- Remove blockage. In really cold conditions, ice buildup may occur on the terminal and should be removed as required. (To minimize this from reoccuring, the vent lengths that pass through unheated spaces (attics, garages, crawl spaces) should be wrapped with an insulated mylar sleeve).
	Incorrect installation.	- Refer to “venting” section to ensure correct installation.
Flames are consistently too large or too small. Carboning occurs.	Appliance is over- red or under- red.	- Check pressure readings: Inlet pressure can be checked by turning screw (A) counter-clockwise 2 or 3 turns and then placing pressure gauge tubing over the test point. Gauge should read as described on the chart below. Check that main burner is operating on ‘HI’. Outlet pressure can be checked the same as above using screw (B). Gauge should read as described on the chart below. Check that main burner is operating on ‘HI’. After taking pressure readings, be sure to turn screws clockwise rmly to reseal. DO NOT OVER TORQUE. Leak test with a soap and water solution.
	Air shutter improperly adjusted.	- Return air shutter to speci ed opening, see “venturi adjustments” section in the installation manual.
Carbon is being deposited on glass, logs, rocks, media, or combustion chamber surfaces.	Air shutter is blocked.	- Ensure air shutter opening is free of lint or other obstructions.
	Flame is impinging on the glass, logs, rocks, media or combustion chamber.	- Ensure the media is positioned correctly in the appliance. - Open air shutter to increase the primary air. - Check the input rate: check the manifold pressure and ori ce size as speci ed by the rating plate. - Ensure door gaskets are not broken or missing and the seal is tight. - Ensure vent liners are free of holes and well sealed at all joints. - Check that minimum rise per foot (meters) has been adhered to for any horizontal venting.
White / grey lm forms.	Sulphur from fuel is being deposited on glass, logs, or combustion chamber surfaces.	- Clean the glass with a recommended gas replace glass cleaner. DO NOT CLEAN GLASS WHEN HOT. - If deposits are not cleaned off regularly, the glass may become permanently marked.
Exhaust fumes smelled in room, headaches.	Appliance is spilling. (This is not applicable in outdoor appliances).	- Check door seal. - Check for exhaust damage. - Check that venting is installed correctly. - Room is in negative pressure; increase fresh air supply.

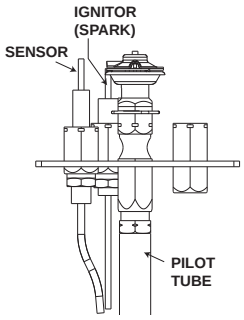

Pressure	Natural Gas (inches)	Natural Gas (millibars)	Propane (inches)	Propane (millibars)
Inlet	*7” (minimum 4.5”)	17.4mb (minimum 11.2mb)	13” (minimum 11”)	32.4mb (minimum 27.4mb)
Outlet	3.5”	8.7mb	10”	24.9mb

*Maximum inlet pressure not to exceed 13” w.c.

troubleshooting

symptom	problem	test solution
Pilot will not light. Makes noise with no spark at pilot burner.	Wiring: short, loose, or damaged connections (poor ame recti cation).	- Verify the thermocouple/sensor is clean and the wiring is undamaged. - Verify the interrupter block is not damaged or too tight. Verify connections from pilot assembly are tight; also verify the connections are not grounding out to any metal. (Remember, the ame carries the recti cation current, not the gas. If ame lifts from pilot hood, the circuit is broken. A wrong ori ce or too high of an inlet pressure can cause the pilot ame to lift)*. The sensor rod may need cleaning.
	No signal from remote with no pilot ignition.	- Reprogram receiver code. - Replace receiver.
	Poor grounding.	- Verify the valve / pilot assembly are properly grounded
	Improper switch wiring.	- Troubleshoot the system with the simplest on/off switch.
	Dirty, painted, or damaged pilot and/or dirty sensor rod.	- Clean sensor rod with a green Scotch-Brite™ pad to remove any contamination that may have accumulated. Verify continuity with multimeter with ohms set at the lowest range.
Pilot sparks but will not light.	Gas supply.	- Verify that the incoming gas line ball valve is “open”. - Verify that the inlet pressure reading is within acceptable limits, inlet pressures must not exceed 13” W.C. (32.4mb).
	Out of propane gas.	- Fill the tank.
	Pilot supply line may contain air.	- Repeat ignition process several times or purge the pilot supply line.
	Incorrect wiring / grounding.	- Ensure correct polarity of wiring of thermocouple (if equipped). - Verify pilot assembly / valve are properly grounded.
	Receiver (if equipped).	- Reset program: hold reset button on receiver and wait for 2 beeps. Release after second beep. Press small ame button on remote within 20 seconds, you will hear an additional beep (this signals a successful reset). - Replace receiver.
	Valve.	- Check valve and replace if necessary (Do not to overtighten thermocouple).
Burner continues to spark and pilot lights but main burner does not light.	Short or loose connection in sensor rod.	- Verify all connections. Verify the connections from the pilot assembly are tight. Also, verify these connections are not grounding out to any metal.
	Dirty, painted, or damaged pilot assembly components.	- Clean using a green Scotch-Brite™ pad to remove any contamination that may have accumulated on the sensor rod, pilot hood, ignitor, or ame sensor. Verify continuity with multimeter with ohms set at the lowest range.
Remote wall switch is in “off” position; burner comes on.	Wall switch mounted upside down.	- Reverse.
	Remote wall switch and/or wire is grounding.	- Replace. - Check for ground (short); repair ground or replace wire.
	Faulty wire	- Replace.
Remote and / or receiver is not functioning properly.	Remote controls lights but no spark or ame. (Remote is locked out).	- Reset by turning power source off then on. **note:** If back up batteries are installed, they must also be removed to re-program
	Receiver or remote has low battery.	- Replace batteries.
	Appliance functions but does not respond to receiver / remote	- Ensure appliance is being operated by the same device that turned it on. Remote controls function if appliance was turned on by remote. Receiver controls function if appliance was turned on by receiver.
	Error with synchronizing.	- Reset receiver and remote.
	Remote too far away from receiver.	- Refer to “wiring diagram” section.
	Wire connector pins are bent.	- Straighten pins.
	Valve wiring is damaged.	- Replace valve.

symptom	problem	test solution
Lights or blower won't function (if equipped).	Control module switch in wrong position.	- Verify ON/OFF switch is in the "I" position which denotes on.
	COM switch is unplugged.	- Verify "COM" switch is plugged into the front of the control module.
Flames are very aggressive.	Door is ajar.	- Ensure door is secured properly.
	Venting action is too great.	- Check to ensure venting is properly sealed or restrict vent exit with restrictor plate. (Not available in all appliances).
Appliance won't perform any functions.	No power to the system.	- Check breaker to verify it's in the "on" position.
	Receiver switch in wrong position (if equipped).	- Verify that the 3 position switch on the receiver is in the remote position (middle).
	Transmitter isn't operational.	- Check battery power and battery orientation.

The following applies speci cally to the SIT system only:

Pilot will not light. Makes no noise with no spark at pilot burner. (Lights and blower operate, if equipped).	Ignition box has been locked out.	Choose one of the 3 methods below to reset the system. 1. To reset ignition box when locked out. Turn off power supply and remove batteries (if used) from the back up battery pack. 2. To reset the DFC Board when the board goes into a lock out condition and the LED is blinking 3 times using the transmitter on/off button: Step 1: Turn the system off by pressing the on/off button to turn the system off. Step 2: After approximately 2 seconds press the on/off button on the transmitter again. The DFC Board will reset and the ignition sequence will start again. 3. To reset the DFC Board when the board goes into a lock out condition and the LED is blinking 3 times by cycling ame: Step 1: In the manual ame control mode, use the down arrow button to reduce the ame to off, indicated by the word OFF displayed on the transmitter LCD screen. Step 2: Wait approximately 2 seconds and press the up arrow button, the ignition sequence will start.

note:

Starting from off, press the on button on the transmitter. After approximately 4 seconds on/off button is pressed, the ignition board will start the spark. The atempt for ignition will last approximately 60 seconds. If there is no ame ignition (recti cation), the board will stop sparking and the board will go into lock out.

15.0 warranty

Napoleon products are manufactured under the strict Standard of the world recognized ISO 9001 : 2015 Quality Management System.

Napoleon products are designed with superior components and materials assembled by trained craftsmen who take great pride in their work. The burner and valve assembly are leak and test- red at a quality test station. The complete appliance is again thoroughly inspected by a quali ed technician before packaging to ensure that you, the customer, receive the quality product that you expect from Napoleon.

Napoleon Gas Appliance President's Lifetime Limited Warranty

The following materials and workmanship in your new Napoleon gas appliance are warranted against defects for as long as you own the appliance. This covers: combustion chamber, heat exchanger, stainless / steel burner, Phazer™ logs and embers, rocks, ceramic glass (thermal breakage only), gold plated parts against tarnishing, porcelainized enameled components and aluminum extrusion trims.*

Electrical (110V and millivolt) components and wearable parts are covered and Napoleon will provide replacement parts free of charge during the rst year of the limited warranty. This covers: blowers, gas valves, thermal switches, switches, wiring, remote controls, ignitors, gaskets and pilot assemblies.*

Labour related to warranty repair is covered free of charge during the rst year (labour warranty is not applicable for the Gas Log Sets). Repair work, however, requires the prior approval of an authorized company of cial. Labour costs to the account of Napoleon are based on a predetermined rate schedule and any repair work must be done through an authorized Napoleon dealer.

* Construction of models vary. Warranty applies only to components included with your speci c appliance.

Conditions and Limitations

Napoleon warrants its products against manufacturing defects to the original purchaser only. Registering your warranty is not necessary. Simply provide your proof of purchase along with the model and serial number to make a warranty claim. Napoleon reserves the right to have its representative inspect any product or part thereof prior to honouring any warranty claim. Provided that the purchase was made through an authorized Napoleon dealer your appliance is subject to the following conditions and limitations:

Warranty coverage begins on the date of original installation. This factory warranty is non-transferable and may not be extended whatsoever by any of our representatives. The gas appliance must be installed by a licensed, authorized service technician or contractor quali ed and authorized installer, service agency or supplier. Installation must be done in accordance with the installation instructions included with the product and all local and national building and re codes. This limited warranty does not cover damages caused by misuse, lack of maintenance, accident, alterations, abuse or neglect, and parts installed from other manufacturers will nullify this warranty. This limited warranty further does not cover any scratches, dents, corrosion or discoloring caused by excessive heat, abrasive and chemical cleaners nor chipping on porcelain enamel parts, mechanical breakage of Phazer™ logs and embers. This warranty extends to the repair or replacement of warranted parts which are defective in material or workmanship provided that the product has been operated in accordance with the operation instructions and under normal conditions. After the rst year, with respect to this President's Lifetime Limited Warranty, Napoleon may, at its discretion, fully discharge all obligations with respect to this warranty by refunding to the original warranted purchaser the wholesale price of any warranted but defective part(s).

After the rst year, Napoleon will not be responsible for installation, labour, or any other expenses related to the reinstallation of a warranted part and such expenses are not covered by this warranty. Notwithstanding any provisions contained in the President's Lifetime Limited Warranty, Napoleon's responsibility under this warranty is de ned as above and it shall not in any event extend to any incidental, consequential or indirect damages. This warranty de nes the obligations and liability of Napoleon with respect to the Napoleon gas appliance and any other warranties expressed or implied with respect to this product, its components or accessories are excluded. Napoleon neither assumes, nor authorizes any third party to assume, on its behalf, any other liabilities with respect to the sale of this product. Napoleon will not be responsible for: over- ring, downdrafts, spillage caused by environmental conditions such as rooftops, buildings, nearby trees, hills, mountains, inadequate vents or ventilation, excessive venting con gurations, insuf cient makeup air, or negative air pressures which may or may not be caused by mechanical systems such as exhaust fans, furnaces, clothes dryers, etc. Any damages to the appliance, combustion chamber, heat exchanger, plated trim or other components due to water, weather damage, long periods of dampness, condensation, damaging chemicals or cleaners will not be the responsibility of Napoleon.

During the rst 10 years Napoleon will replace or repair the defective parts covered by the lifetime warranty at our discretion free of charge. From 10 years to life, Napoleon will provide replacement parts at 50% of the current retail price. The manufacturer may require that defective parts or products be returned or that digital pictures be provided to support the claim. Returned products are to be shipped prepaid to the manufacturer for investigation. If a product is found to be defective, the manufacturer will repair or replace such defect. Before shipping your appliance or defective components, your dealer must obtain an authorization number. Any merchandise shipped without authorization will be refused and returned to sender. Shipping costs are not covered under this warranty. Additional service fees may apply if you are seeking warranty service from a dealer. Warranty labour allowance is only for the replacement of the warranted part. Travel, diagnostic tests, shipping and other related charges are not covered by this warranty.

All speci cations and designed are subject to change without prior notice due to on-going product improvements. Napoleon is a registered trademark of Wolf Steel Ltd.

Appliance Service History

This appliance must be serviced annually depending on usage.

Date	Dealer Name	Service Technician Name	Service Performed	Special Concerns

NAPOLEON CELEBRATING OVER 40 YEARS OF HOME COMFORT PRODUCTS

7200, Route Transcanadienne, Montréal, Québec H4T 1A3
24 Napoleon Road, Barrie, Ontario, Canada L4M 0G8
214 Bayview Drive, Barrie, Ontario, Canada L4N 4Y8
103 Miller Drive, Crittenden, Kentucky, USA 41030
De Riemsdijk 22, 4004 LC Tiel, The Netherlands

Phone: 1-866-820-8686
napoleon.com