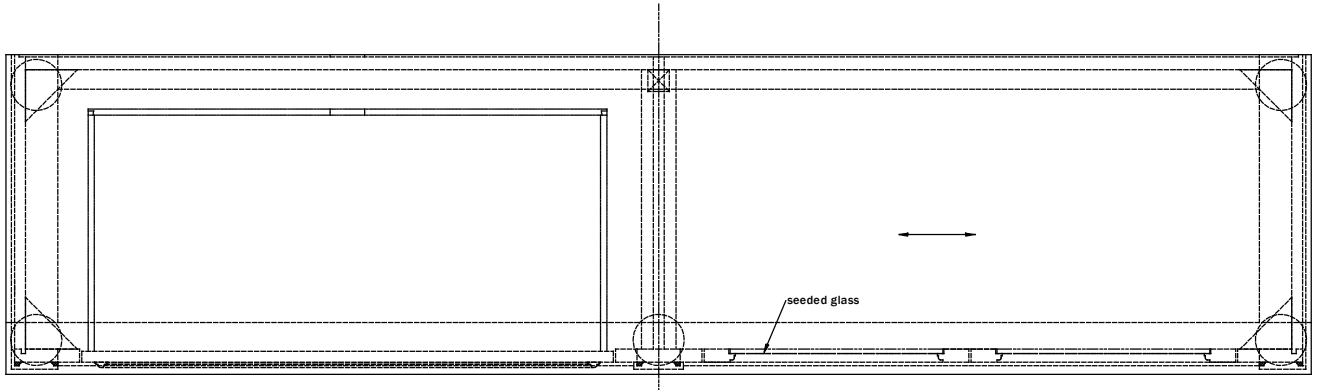

LEGENDS
FURNITURE

SKU # and Description:
ZWTN-1775 75" TV Console
DATE: Jun 25 , 2020
N/A
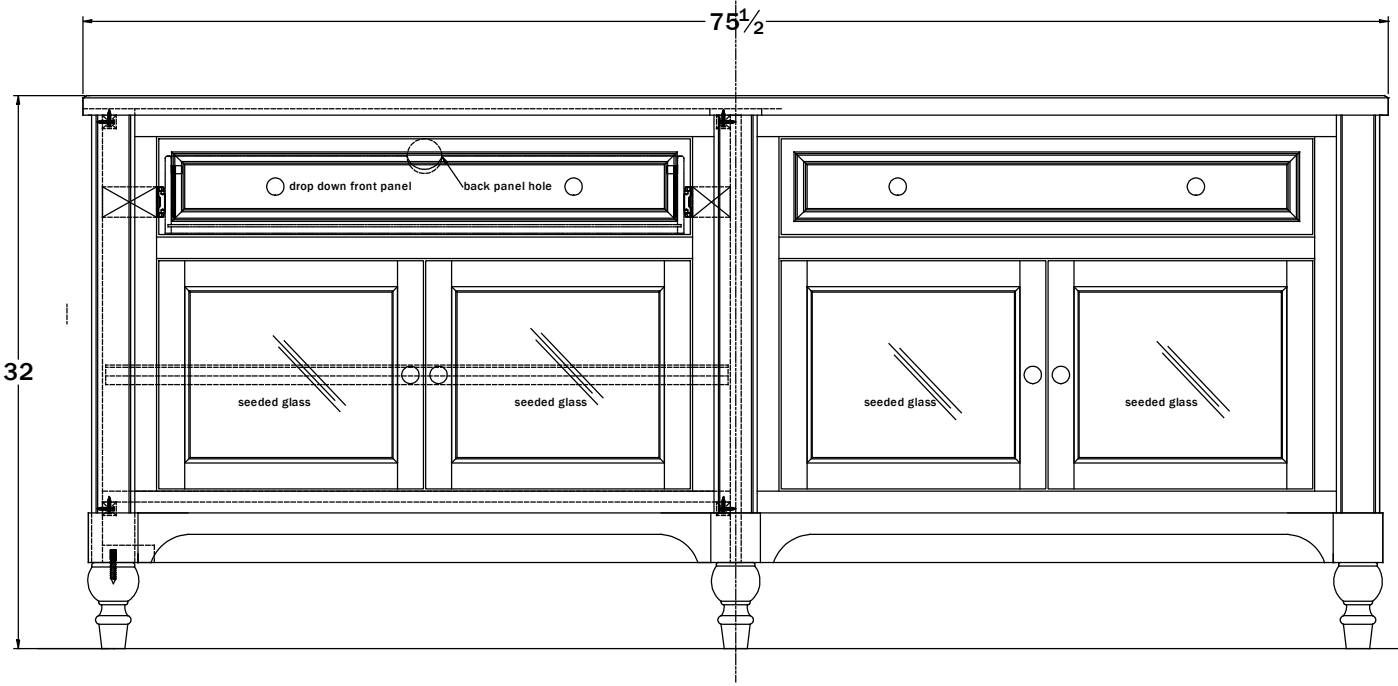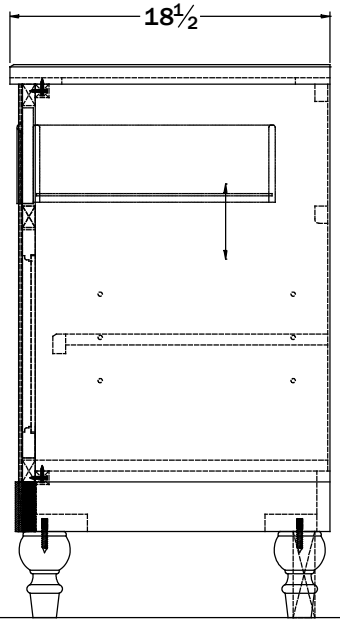
Solid Species: N/A
Veneer Species: N/A
Hardware Instructions: N/A
Product Dimensions: 75 1/2W x 18 1/2D x 32H
Revisions/Notes: