FLEXSTEEL®

Power Reclining Sofa, Power Headrest, Lumbar, Heat & Full Body Massage

IMPORTANT NOTE

Read these instructions carefully and familiarize yourself with each procedure before assembling the furniture. Check that you have all the component parts and familiarize yourself with each part before proceeding.

Take all the fittings out of the plastic bag and separate them into groups. Ensure you have enough space to lay out all the parts before assembly. To prevent damage to the parts, we recommend that you assemble the unit on a soft, level surface.

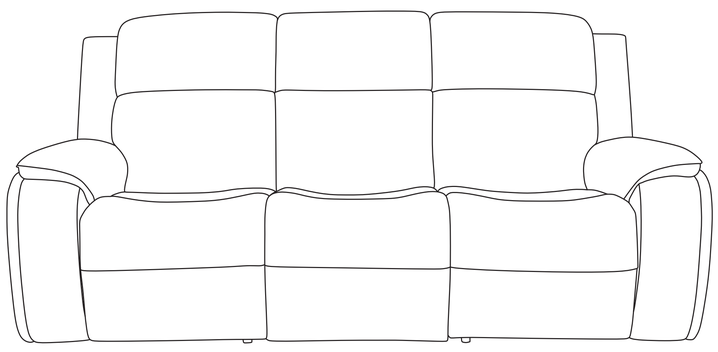

Part List

A. Left Back
1 piece

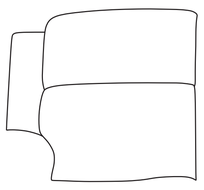

B. Right Back
1 piece

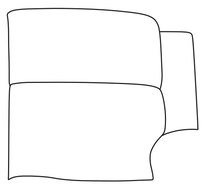

C. Center Back
1 piece

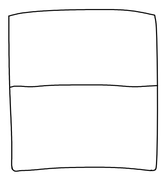

D. Seat
1 piece

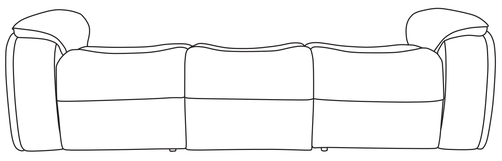

E. Transformer
2 pieces

F. AC Power Cable
2 pieces

Assembly Instructions

STEP 1

Detach the Transformers (E) and the AC Power Cables (F) from the bottom of the Seat (D). (See Figure 1.)

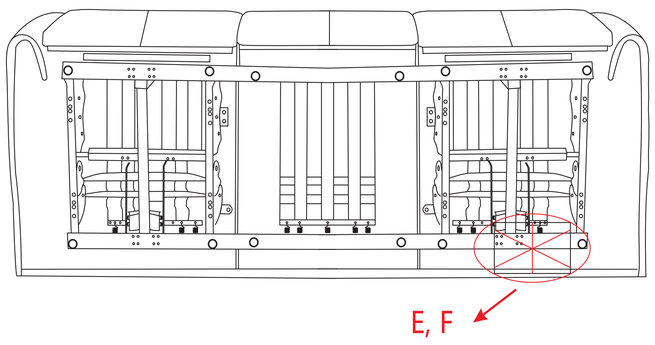

Figure 1

STEP 2

Lay the Backs (A B) face down on the Seat (D).
Zip the fabric on bottom of the Backs (A B) with back of the Seat (D). (See Figure 2.)

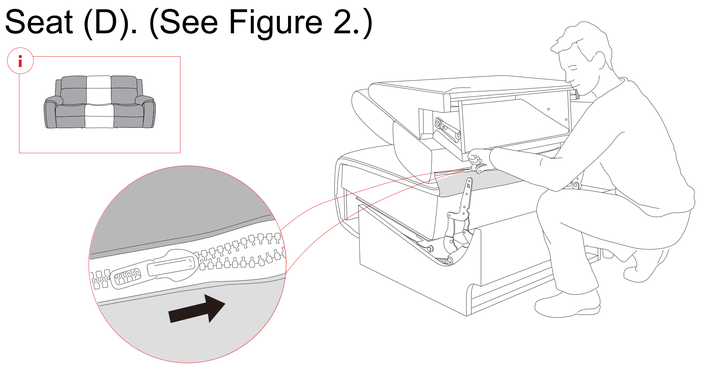

Figure 2

STEP 3

Connect the foot massage, dial switch, headrest, lumbar cables and air massage tubes between the Backs (A B) and the Seat (D). (See Figure 3.)

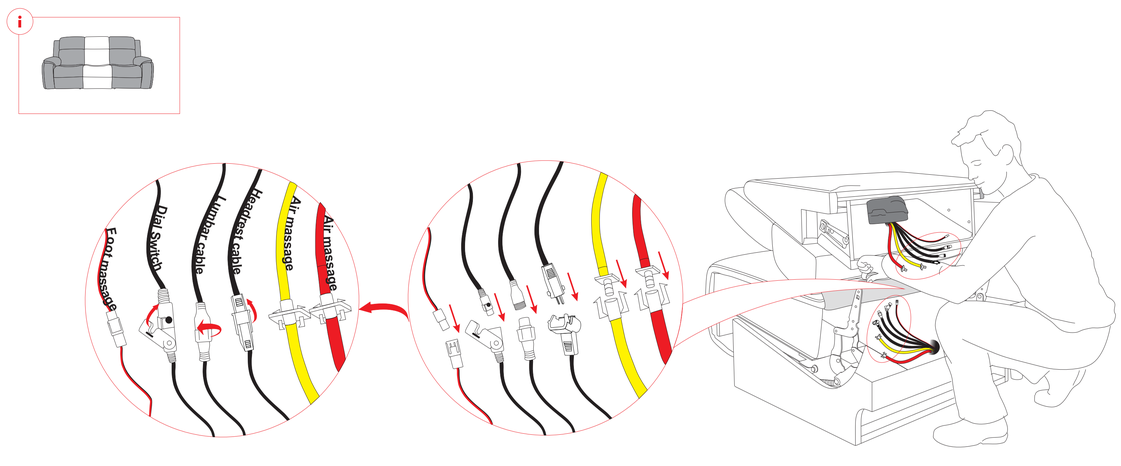

Figure 3

STEP 4

Attach the Backs (A B C) to the Seat (D). Ensure the latches fit well. (See Figure 4.)

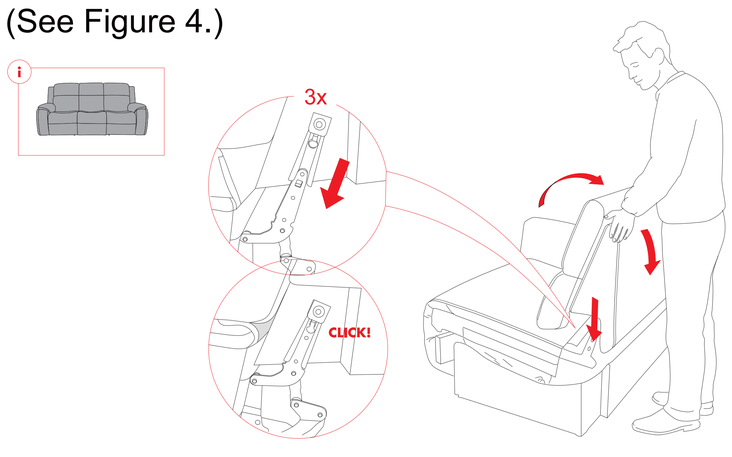

Figure 4

STEP 5

Fasten the back flaps to the bottom of the furniture. (See Figure 5.)

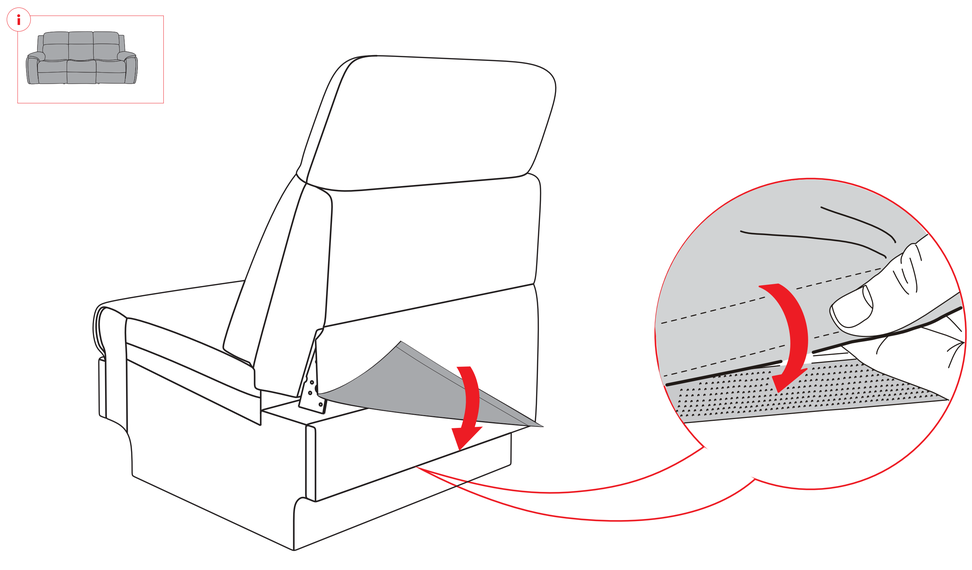

Figure 5

STEP 6

Connect the base motor cables and AC Power Cables (F) to the Transformers (E). Plug the AC Power Cables into nearby outlets. (See Figure 6.)

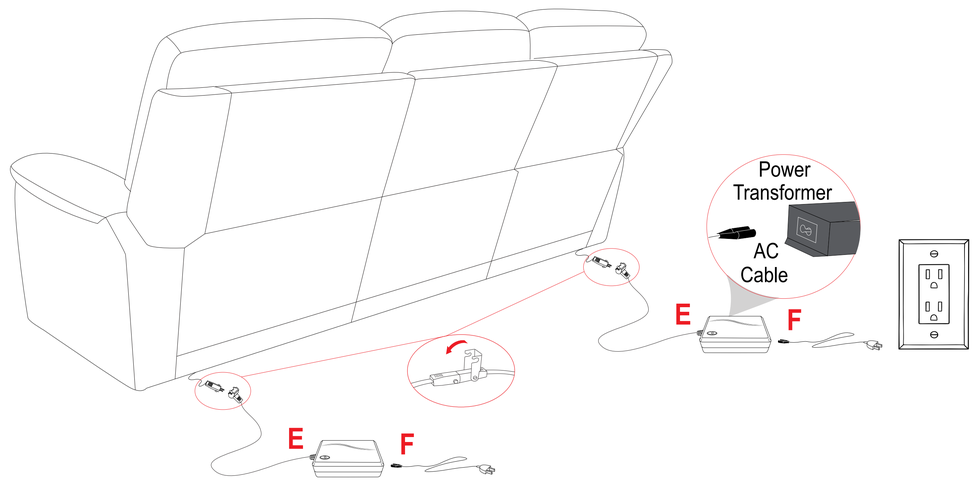

Figure 6

Disassembly Instructions

Unzip the zipper between the Backs (A B) and the Seat (D), then disconnect all the cables and air massage tubes.
Pull up the spring leaf in bracket, then lift Backs (A B C) up. (See Figure 7.)

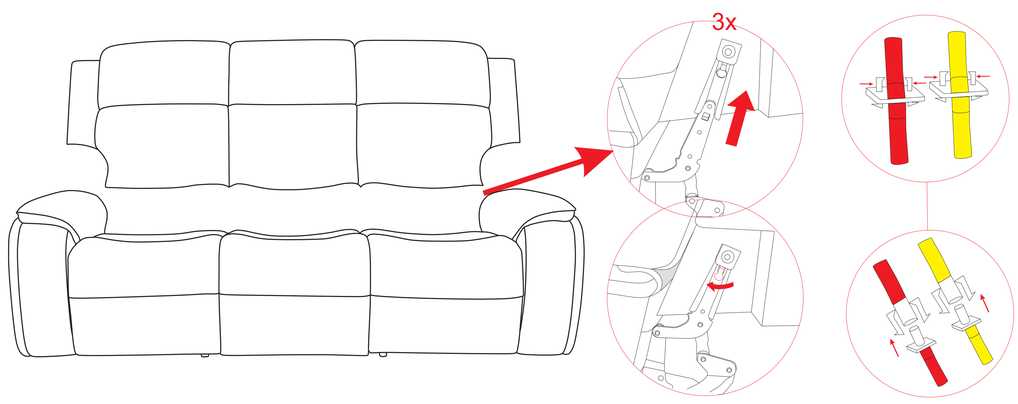

Figure 7

Hidden Cupholder and Dial Switch

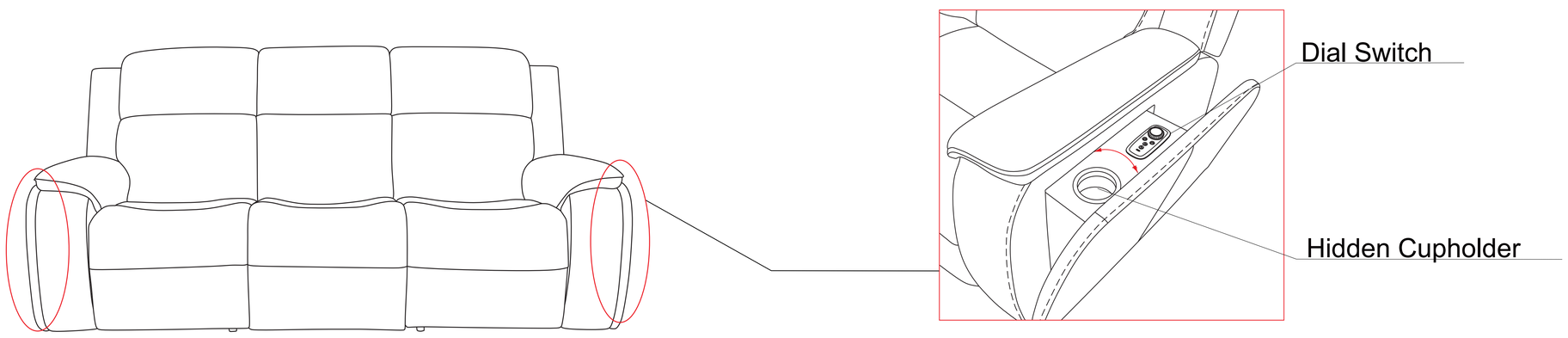

IMPORTANT NOTE

- To avoid any risk of suffocation to children or pets, dispose of all plastic bags immediately.
- To ensure proper performance, occasionally check for loose hardware and tighten as needed.
- If the reclining functions are not working properly, check for loose cable connections before contacting the retailer.