36" Counter-Depth 3-Door Refrigerator

BOSCH

800 Series – Stainless Steel B36CT84SNS



B36CT84SNS
Stainless Steel

Also available in:

Black Stainless Steel
B36CT84SNB

Bosch VitaFresh® pro—fresh food, less waste, more savings.

Features & Benefits

- VitaFresh® pro keeps raspberries fresh for over 3 weeks. Use various preset modes for optimized temperature and humidity to turn freshness into savings.
- PureMini™ ice cubes fit in any bottle and chill drinks faster.
- Two is better than one: dual compressors for precise performance.
- Interior water dispenser is thoughtfully placed inside for refreshing water at the touch of a button or a push of a nozzle.
- FlexBar® gives you more space and organization in your fridge.

General Properties	
Anti-fingerprint stainless steel	Yes
Full 72" height and true counter depth for built-in appearance	Yes
Easy Clean Stainless Steel	Yes
Lighting	Recessed LED light bars
Number of compressors/ evaporators	2 / 2
Defrost process refrigerator section	Frost-free
Number of shelves – refrigerator	5
Adjustable shelves – refrigerator	4 half-width
Shelf material – refrigerator	Tempered glass
Type of shelves – refrigerator	Frameless split shelves with metal trim
Flexible storage bar	FlexBar®
Gallon storage bins	2
Humidity control compartments	2
Full width temp. & humidity controlled drawer	VitaFresh® pro
Ice maker	Yes
Ice type	PureMini™ ice
Water filter	UltraClarityPro®
Internal water dispenser	Yes
Touch control panel	Yes
AirFresh® filter	Yes
FreshProtect® ethylene filter	Yes
MultiAirFlow™	Yes
Stainless steel back wall	Yes
Defrost process freezer section	Automatic
Number of drawers – freezer	3
Wi-Fi enabled	Yes, Home Connect® app

Capacity	
Total capacity	20.8 cu. ft.
Refrigerator capacity	14.8 cu. ft.
Freezer capacity	6 cu. ft.

Technical Details	
Current	15 A
Volts	115 V
Frequency	60 Hz
Power cord length	67"
Plug type	120V-3 prong

Dimensions & Weight	
Appliance dimensions with hinges, handles and doors (HxWxD)	72"* x 35 5/8" x 31 1/8"
Appliance dimensions without hinges and doors (HxWxD)	71 1/2" x 35 5/8" x 24"**
Appliance dimensions with hinges and doors, no handles (HxWxD)	72"* x 35 5/8" x 28 3/4"
Required cutout size (HxWxD)	72" x 36" x 25"
Net weight	350 lbs

Efficiency	
Energy consumption	570 kWh/yr
ENERGY STAR® Certified	Yes

Accessories

UltraClarityPro® Water Filter: BORPLFTR55
Ethylene Filter Kit: FPETHKT50
Ethylene Filter Refill Kit: FPETHRF50
90 Degree Door Stopper: 10012733

Home Connect

*When leveling legs are fully extended, add 5/8" to overall height, total 72 5/8".
**The cutout depth of 25" includes the required 1" airflow. The electrical covers on the back of unit do not require additional depth.

Accessories: To purchase Bosch accessories, cleaners & parts please visit www.bosch-home.com/us/store or call 1-800-944-2904 (Mon to Fri 5 am to 6 pm PST, Sat 6 am to 3 pm PST).

Notes: All height, width and depth dimensions are shown in inches. BSH reserves the absolute and unrestricted right to change product materials and specifications, at any time, without notice. Consult the product's installation instructions for final dimensional data and other details prior to making cutout.

Warranties: Please see Use & Care manual or Bosch website for statement of limited warranty.

For more information on our entire line of products, go to www.bosch-home.com/us or call 1-800-944-2904

© BSH Home Appliances Corporation. All rights reserved. Bosch is a registered trademark of Robert Bosch GmbH.

36" Counter-Depth 3-Door Refrigerator

800 Series – Stainless Steel B36CT84SNS

Installation Details

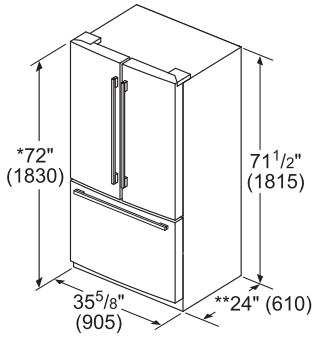

*Add 5/8" (17) with front levelling feet fully extended
**Add 1" (25) for fixed spacers on back
measurements in inches (mm)

Measurements in inches (mm)

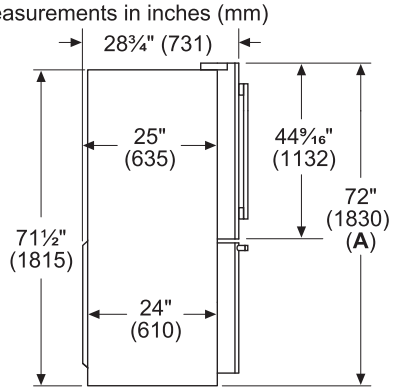

A: Add 5/8" (17) with front leveling feet fully extended

Measurements in inches (mm)

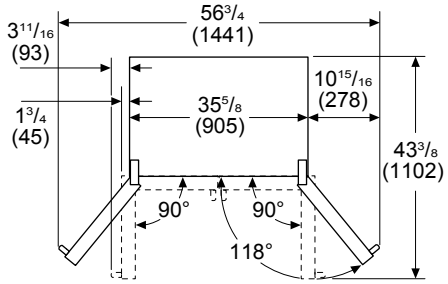

Drawers can be pulled out with door open to 90°
Drawers can be taken out with door completely opened

Measurements in inches (mm)

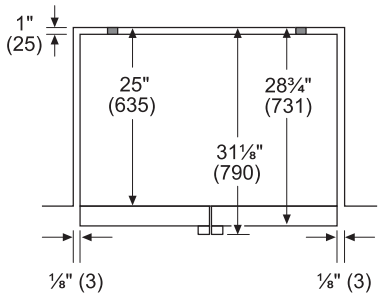

Measurements in inches (mm)

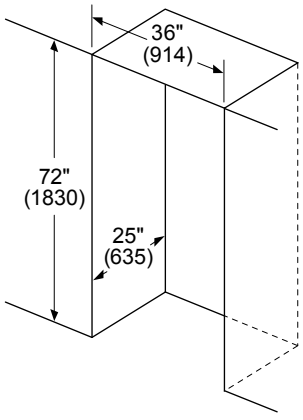

Leave ½" (12.7) gap at the top and 1" (25.4) behind the refrigerator for proper ventilation.

It is recommended that you do not install the refrigerator near a heat source such as a stove or a range.

PFAS

Accessories: To purchase Bosch accessories, cleaners & parts please visit www.bosch-home.com/us/store or call 1-800-944-2904 (Mon to Fri 5 am to 6 pm PST, Sat 6 am to 3 pm PST).

Notes: All height, width and depth dimensions are shown in inches. BSH reserves the absolute and unrestricted right to change product materials and specifications, at any time, without notice. Consult the product's installation instructions for final dimensional data and other details prior to making cutout.

Warranties: Please see Use & Care manual or Bosch website for statement of limited warranty.

For more information on our entire line of products, go to www.bosch-home.com/us or call 1-800-944-2904

© BSH Home Appliances Corporation. All rights reserved. Bosch is a registered trademark of Robert Bosch GmbH.