Signature Design

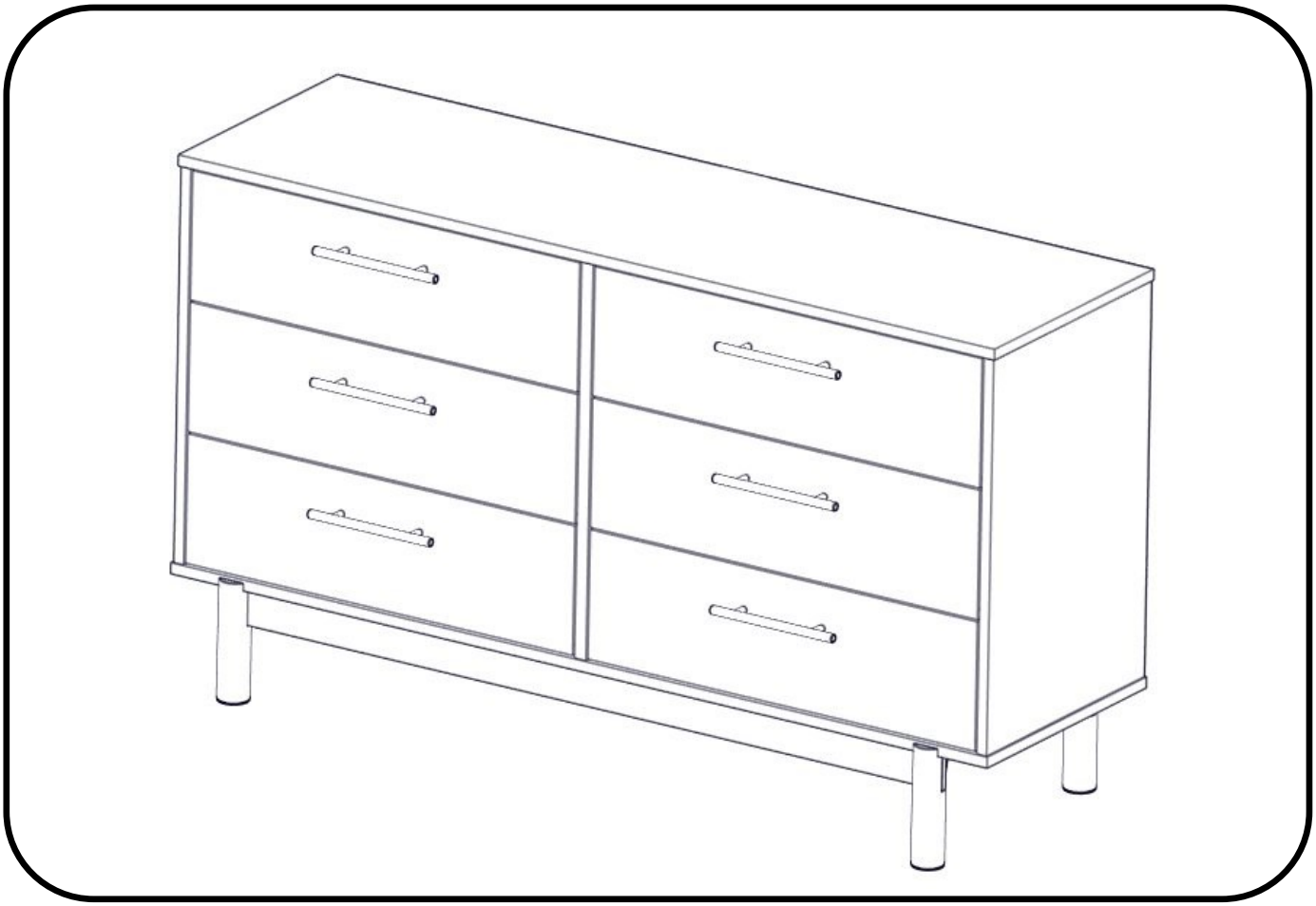

Dresser
Assembly instructions and warranty information

Une Commode

Instructions de montage et de renseignements sur la garantie

Vestidor

Instrucciones de montaje e información sobre la garantía

Dressoir
Montage-instructies en garantie-informatie

Required tools for assembly
Outils requis pour l'assemblage
Herramientas necesarias para el montaje
Vereiste hulpmiddelen voor assemblage

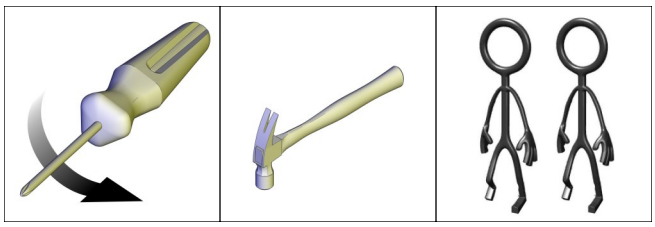

Place Serial # Here

Lugar número # aquí

Part# 10035864 (02-22-21)

WARNING

Children have died from furniture tip over. To reduce the risk of furniture tipover:

- ALWAYS install tip over restraint provided.
- NEVER put a TV on the product.
- NEVER allow children to stand, climb, or hang on drawers,doors, or shelves
- NEVER open more than one drawer at a time
- Place heaviest items in the lowest drawers.

ADVERTENCIA

Se han producido muertes Intantiles Producto del volcado de muebles. Para reducir el riesgo de volcado de muebles:

- Instale SIEMPRE el sistema de fijación anticolcado.
- NUNCA coloque televisores sobre este producto.
- NUNCA permite que los niños se paren, trepen o cuelguen de cajones, puertas o estanterías.
- NUNCA abra mas de un cajón al mismo tiemp.
- Coloque los artículos más pesados en los cajones inferiores.

VERIFIED

Product Stability (50 lbs.)

Program Endorsed by American Home Furnishings Alliance

UL VERIFIED Verify.UL.com B393140

AVERTISSEMENT

Le basculement d'un meuble peut bénir vos entants, voire entrainer leur mort. pour reduire ce risque:

- Installes TOUJOURS le dispositif de retenue fourni.
- N'installez JAMAIS de téléviseur sur ce produit.
- Ne permettez JAMAIS à vos enfants de monter sur les tiroirs, portes ou étagères de grimper ou de s'y accrocher.
- N'ouvrez JAMAIS plus d'un tiroir à la fois.
- Rangez les objets les plus lourds dans les tiroirs du bas.

IMPORTANT SAFETY NOTICE
READ CAREFULLY BEFORE BEGINNING ASSEMBLY

- This unit contains small parts that present a choking hazard for children under 3 years of age. These parts are for adult assembly only and should be permanently affixed to the furniture. Any unused parts should be discarded properly.
- To make the assembly process easier, ask a friend to help you. ***2 people required***
- Always use proper tools.
- Carefully review the parts and hardware list.
- It is recommended that you assemble the unit on a protected surface or carpeted floor to avoid scratches.
- Follow assembly steps in order. DO NOT SKIP ANY STEPS.
- Periodically check to ensure that all connectors (bolts, screws, etc.) are tight.
- Keep the instructions for future reference.

Ashley Furniture Industries, Inc. disclaims any liability for damages or injuries which may occur due to failure to properly follow assembly instructions, properly assemble the product, or properly use the product.

AVIS DE SÉCURITÉ IMPORTANT
LIRE ATTENTIVEMENT AVANT DE COMMENCER LE MONTAGE

- Cet appareil contient de petites pièces qui présentent un risque d'étouffement pour les enfants âgés de moins de 3 ans. Ces pièces sont pour l'assemblage par un adulte seulement et doivent être apposées de façon permanente aux meubles. Toute pièce inutilisée devrait être éliminé correctement.
- Pour faciliter le processus d'assemblage, demandez à un ami pour vous aider. ***2 personnes nécessaires***
- Toujours utiliser des outils appropriés.
- Lire attentivement les pièces et la liste du matériel.
- Nous recommandons que vous montez l'appareil sur une surface protégée ou de moquette pour éviter les rayures.
- Suivez les étapes de montage dans l'ordre. NE SAUTEZ PAS LES ÉTAPES.
- Vérifier périodiquement pour s'assurer que tous les connecteurs (boulons, vis, etc.) sont bien serrés.
- Conserver les instructions pour toute consultation ultérieure.

Ashley Furniture Industries, Inc. décline toute responsabilité pour les dommages ou blessures pouvant survenir en raison de l'omission de bien suivent les instructions d'assemblage, assemblent correctement le produit ou utilisent correctement le produit.

AVISO IMPORTANTE DE SEGURIDAD
LEA CUIDADOSAMENTE ANTES DE COMENZAR A ARMAR

- Esta unidad contiene piezas pequeñas que presentan un peligro de asfixia para los niños menores de 3 años de edad. Estas piezas son para montaje por un adulto solamente y deben colocarse permanentemente a los muebles. Las partes no utilizadas deben desecharse correctamente.
- Para facilitar el proceso de ensamblaje, pedirle a un amigo que te ayude. ***2 personas requeridas***
- Siempre use las herramientas adecuadas.
- Revisar cuidadosamente las piezas y lista de hardware.
- Le recomendamos que montar la unidad sobre una superficie protegida o moqueta para evitar arañazos.
- Siga los pasos de montaje en orden. NO SE SALTE LOS PASOS.
- Revise periódicamente para asegurarse de que todos los conectores (pernos, tornillos, etc.) están bien apretados.
- Guarde las instrucciones para referencia futura.

Ashley Furniture Industries, Inc. se exime de cualquier responsabilidad por daños o lesiones que pueden ocurrir debido a que no correctamente sigan las instrucciones de montaje, montan correctamente el producto o usan correctamente el producto.

BELANGRIJKE VEILIGHEIDS AANKONDIGING AANDACHTIG TE LEZEN ALVORENS BEGIN VERGADERING

- Dit apparaat bevat kleine onderdelen die gevaar voor verstikking opleveren voor kinderen jonger dan 3 jaar. Deze onderdelen zijn voor volwassen vergadering alleen en moeten permanent op de meubels worden aangebracht. Alle ongebruikte delen moeten naar behoren worden weggegooid.
- Om de assemblage proces gemakkelijker maken, vraag een vriend om u te helpen. ***2 personen vereist***
- Gebruik altijd juiste hulpmiddelen.
- Controleer zorgvuldig de onderdelen en de hardwarelijst.
- Het is raadzaam dat u de eenheid op een beschermde oppervlakte of beklede vloer samenstellen te voorkomen krassen.
- Assemblage stappen in volgorde. NIET ALLE STAPPEN OVERSLAAN.
- Regelmatig controleren om ervoor te zorgen dat alle connectors (bouten, schroeven, enz.) strak zijn.
- Bewaar de instructies voor toekomstig gebruik.

Ashley Furniture Industries, Inc. aanvaardt geen aansprakelijkheid voor schade of verwondingen die zich te wijten aan niet goed voordoen kunnen volgen montage-instructies, het product goed te monteren of correct gebruik van het product.

CARE AND CLEANING INSTRUCTIONS

Congratulations on the purchase of your new product. Proper care and cleaning will extend the life of your purchase. To ensure your product maintains its finish and quality:

- Use a soft, clean cloth that will not scratch the surface when dusting
- Clean only with a slightly damp cloth
- Do not use chemical based products or solvents
- Liquid spills should be removed immediately
- Direct sunlight may fade or alter color of wood finishes

INSTRUCTIONS DE NETTOYAGE ET DE SOINS

Toutes nos félicitations pour l'achat de votre nouveau produit. Bon entretien et un nettoyage prolonger la vie de votre achat. Pour vous assurer que votre produit maintient sa finition et sa qualité:

- Utilisez un chiffon doux et propre qui n'égratigne pas la surface lorsque l'époussetage
- Nettoyer uniquement avec un chiffon légèrement humide
- Ne pas utiliser chimique basé de produits ou de solvants
- Déversements de liquides doivent être retirés immédiatement
- Lumière directe du soleil peut s'estomper ou modifier la couleur de la finition en bois

CUIDADO Y LIMPIEZA

Felicidades por la compra de su nuevo producto. El cuidado apropiado y la limpieza prolongar la vida de su compra. Para asegurar que el producto mantiene su calidad y acabado:

- Utilice un paño suave que no se rayará la superficie cuando el polvo
- Limpie sólo con un paño ligeramente humedecido
- ¿No use químicos basado en productos o disolventes
- Los derrames de líquidos deben eliminarse inmediatamente
- La luz solar directa puede desaparecer o alterar color de revestimientos de madera

ZORG EN REINIGINGSINSTRUCTIES

Gefeliciteerd met de aankoop van uw nieuwe product. Juiste zorg en schoonmaak zal verlengen de levensduur van uw aankoop. Om ervoor te zorgen dat uw product handhaaft zijn afwerking en kwaliteit:

- Gebruik een zachte, schone doek dat geen op het oppervlak krassen zal wanneer afstoffen
- Alleen met een licht vochtige doek schoonmaken
- Doen niet gebruik chemische gebaseerd producten of oplosmiddelen
- Gemorste vloeistof moeten onmiddellijk worden verwijderd
- Direct zonlicht kan vervagen of veranderen van kleur van hout afwerkingen

CUSTOMER SERVICE

To order replacement parts, or if you have any difficulty assembling this unit refer to the front page of this manual for model and serial # information along with finding the needed part number(s) from the parts list. Then call our customer service line. Please do not return any parts to the store.

SERVICE À LA CLIENTÈLE

Pour commander des pièces de remplacement, ou si vous avez des difficultés à assembler les pièces voir la première page de ce manuel pour les informations de modèle et numéro de série ainsi que de trouver le numéro de partie nécessaire de la liste de pièces. Alors appelez notre service client. Prière de ne pas retourner toutes les pièces au magasin.

SERVICIO AL CLIENTE

Para pedir piezas de repuesto, o si tienes alguna dificultad para ensamblar esta unidad refiérase a la portada de este manual para el modelo y # serial información junto a encontrar los números de parte necesaria de la lista de piezas. Luego llame a nuestra línea de servicio al cliente. Por favor, no devuelva las piezas a la tienda.

KLANTENSERVICE

Te volgorde vervangende onderdelen, of als u problemen heeft dit apparaat te monteren verwijzen naar de voorpagina van deze handleiding voor model en seriële # informatie samen met het vinden van het benodigde deel nummer uit de onderdelenlijst met. Roep vervolgens onze klantenservice lijn. Ga niet delen terug naar de winkel.

1-844-966-0809

RTAParts@ashleyfurniture.com
www.ashleyfurniture.parts

Statesville RTA
Parts Dept. / Corporate Building
607 Meacham Road
Statesville, NC 28677

Helpful Tips | Conseils utiles | Consejos útiles | Nuttige Tips

INSTALLING CAM
Identify arrow on head of cam. Arrow MUST point toward hole in edge of panel. Push cam all the way down into hole.

INSTALLATION DE CAM
Identifier la flèche sur la tête de la came. Flèche DOIT pointer vers le trou dans le bord du panneau. Poussez la cam tout en bas dans le trou.

INSTALACIÓN DE LEVA
Identificar la flecha en la cabeza de la leva. Flecha DEBE apuntar hacia el agujero en el borde del panel. Empuje leva hacia abajo en el orificio.

INSTALLEREN CAM
Pijl op hoofd van cam te identificeren. Pijl MOET wijzen naar gat aan de rand van het deelvenster. Duw cam helemaal naar beneden in het gat.

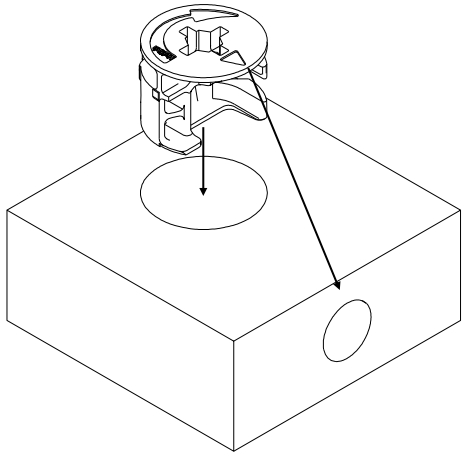

CAM AND DOWEL ALIGNMENT
Assure cam arrow points toward hole and insert cam dowel into hole. Make sure pieces join together.

ALIGNEMENT DE CAM ET DE LA CHEVILLE
Assurer la cam flèche pointe vers le trou et introduire des cam cheville dans le trou. Assurez-vous que les pièces s'unir.

ALINEACIÓN DE LA LEVA Y ESPIGA
Asegurar la leva flecha apunte hacia el agujero e Inserte el pasador cam en el agujero. Asegúrese de unir piezas.

CAM EN VATTENPRODUCENTEN UITLIJNING
Cam pijl wijst naar gat verzekeren en cam stokje invoegen gat. Zorg ervoor dat stukken samen te voegen.

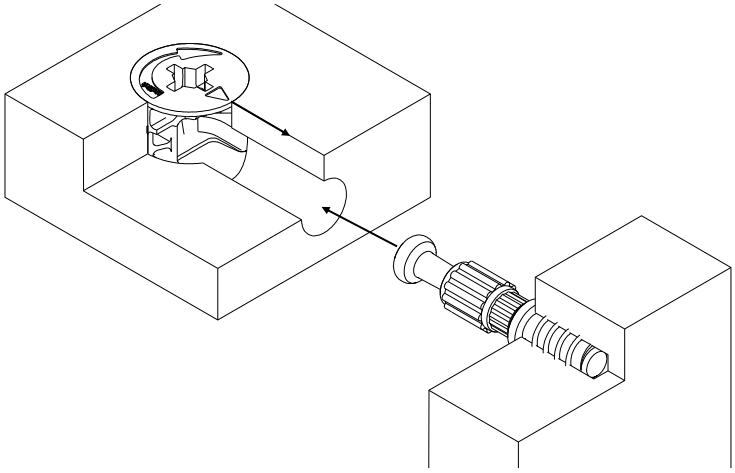

TIGHTENING CAM
Use screwdriver to turn cam. Turn cam (Clockwise) until fully tightened. Slightly more than half a turn.

CAME SERRAGE
Utilisez le tournevis pour tourner la came. Tourner la came (sens horaire) jusqu'à ce que complètement serré. Un peu plus d'un demi-tour.

APRIETE CAM
Use un destornillador para encender la cámara. Gire la leva (en sentido horario) hasta completamente apretados. Un poco más de media vuelta.

AANSCHERPING VAN DE CAM
Gebruik schroevendraaier om te schakelen van de cam. Draai de cam (met de klok mee) tot volledig aangescherpt. Iets meer dan de helft een beurt.

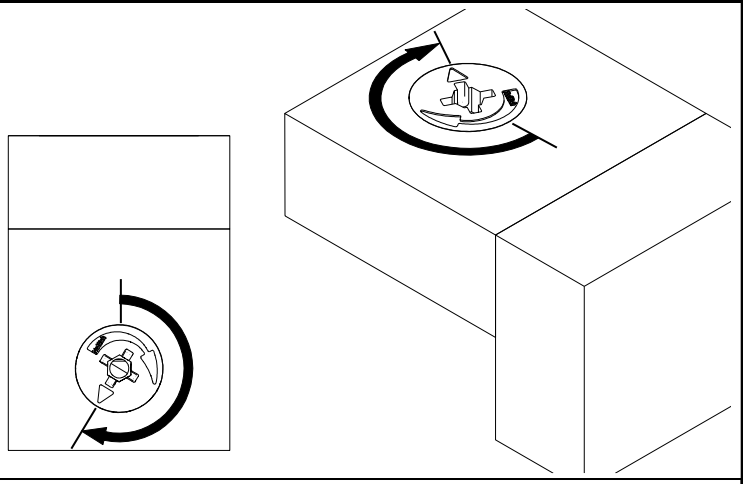

Hand Tighten Screws
We recommend you hand-tighten screws.

Vis serrer à la main
Nous vous recommandons de que vous serrez la main vis.

Apriete los tornillos a mano
Le recomendamos que apriete los tornillos.

Hand draai schroeven
Wij raden dat u hand-draai schroeven.

Part Identification: Use the exploded view and parts list below to help identify parts and quantities. Parts which may have a similar appearance to other parts are marked with labels or identifying marks to help distinguish between other similar parts. *Note: All parts may not have a label or identifying mark.*

Identification de la pièce: Utilisez la vue éclatée et liste des pièces ci-dessous pour aider à identifier les pièces et les quantités. Pièces qui peuvent avoir une apparence similaire à d'autres parties sont marqués avec des étiquettes ou les marques d'identification pour aider à distinguer entre autres pièces similaires. *Remarque : Toutes les pièces ne peut-être pas une étiquette ou identification de marque.*

Identificación de la pieza: Utilice el despiece y lista de piezas abajo para ayudar a identificar las partes y las cantidades. Las piezas que pueden tener una apariencia similar a otras partes están marcadas con etiquetas o marcas de identificación para ayudar a distinguir entre otras piezas similares. *Nota: Todas las partes no pueden tener una etiqueta o marca de identificación.*

Deel de identificatie: De geëxplodeerde weergave en onderdelenlijst hieronder gebruiken om te helpen bij het identificeren van onderdelen en hoeveelheden. Delen die een soortgelijke uitstraling naar andere delen hebben kunnen zijn gemarkeerd met etiketten of merktekens te onderscheiden van andere soortgelijke delen. *Opmerking: Alle onderdelen wellicht niet een label of identificeren van mark.*

Case Components

Label	Description	Qty
1	Top	1
2	Left Side	1
3	Right Side	1
4	Divider	1
5	Bottom	1
6	Drawer Front	6

Label	Description	Qty
7	Drawer Left Side	6
8	Drawer Right Side	6
9	Drawer Back	6
10	Drawer Bottom	6
11	Apron	1
12	Unit Back	1

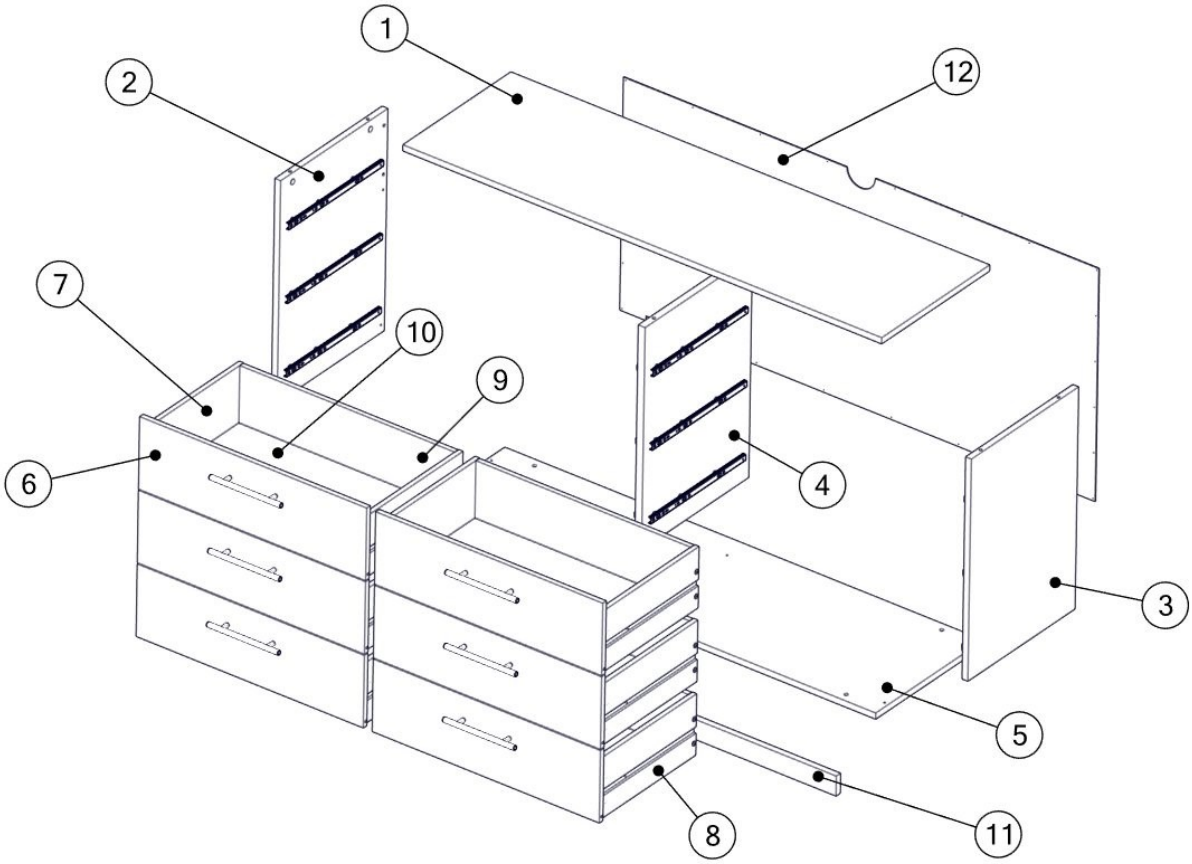

Hardware Identification
Identification du materiel
Identificación de hardware
Hardware-id

Case Hardware

Description	Qty	Image
H62	6	
H14	6	
H37	2	
H21	24	
H84	12	
H81	1	
H82	1	
G32	6	
G37	4	

Description	Qty	Image
H68	24	
H58	12	
G7	4	
H31	12	
H79	1	
H78	2	
H30	5	
H50	6	

Step 1

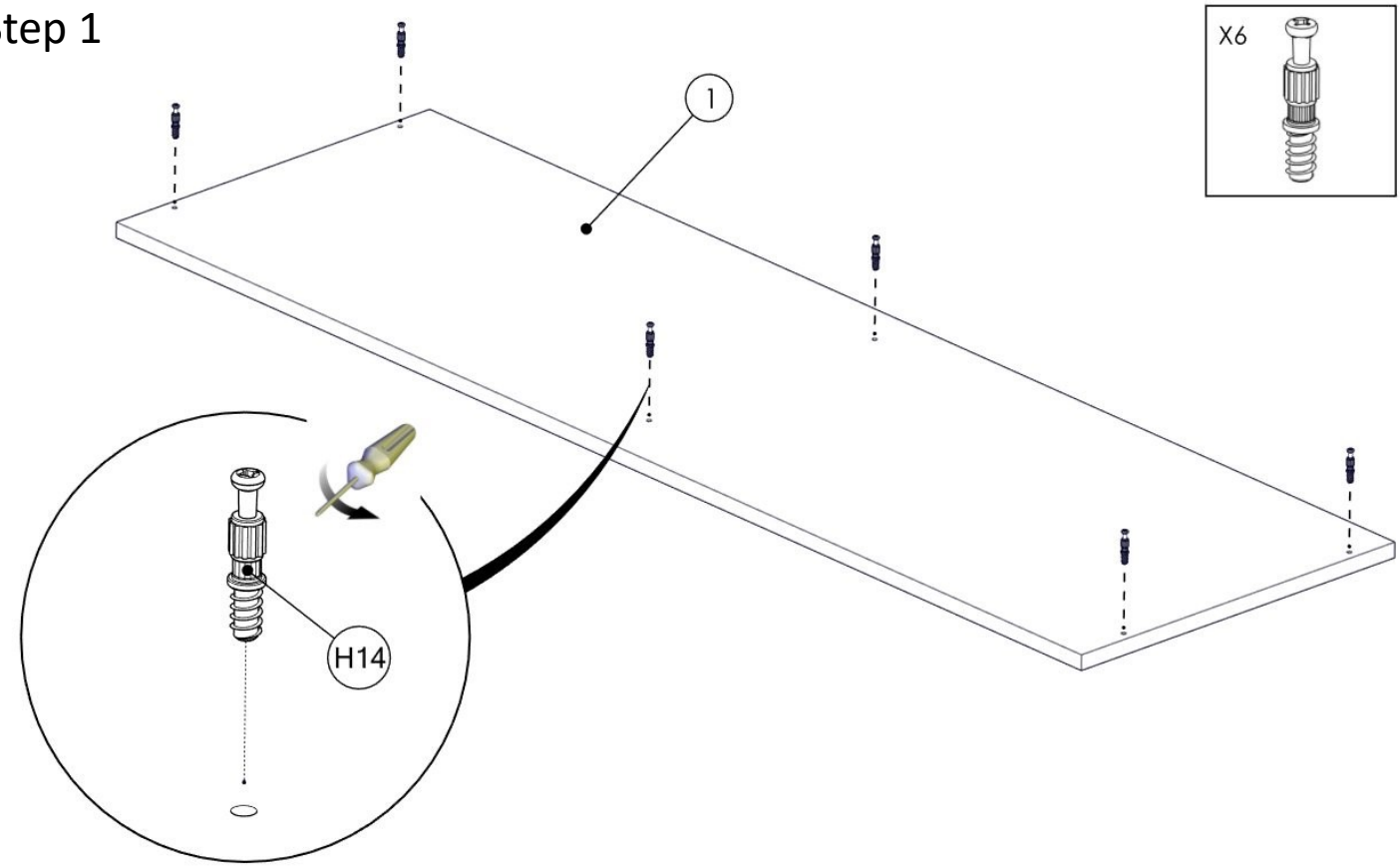

Step 2

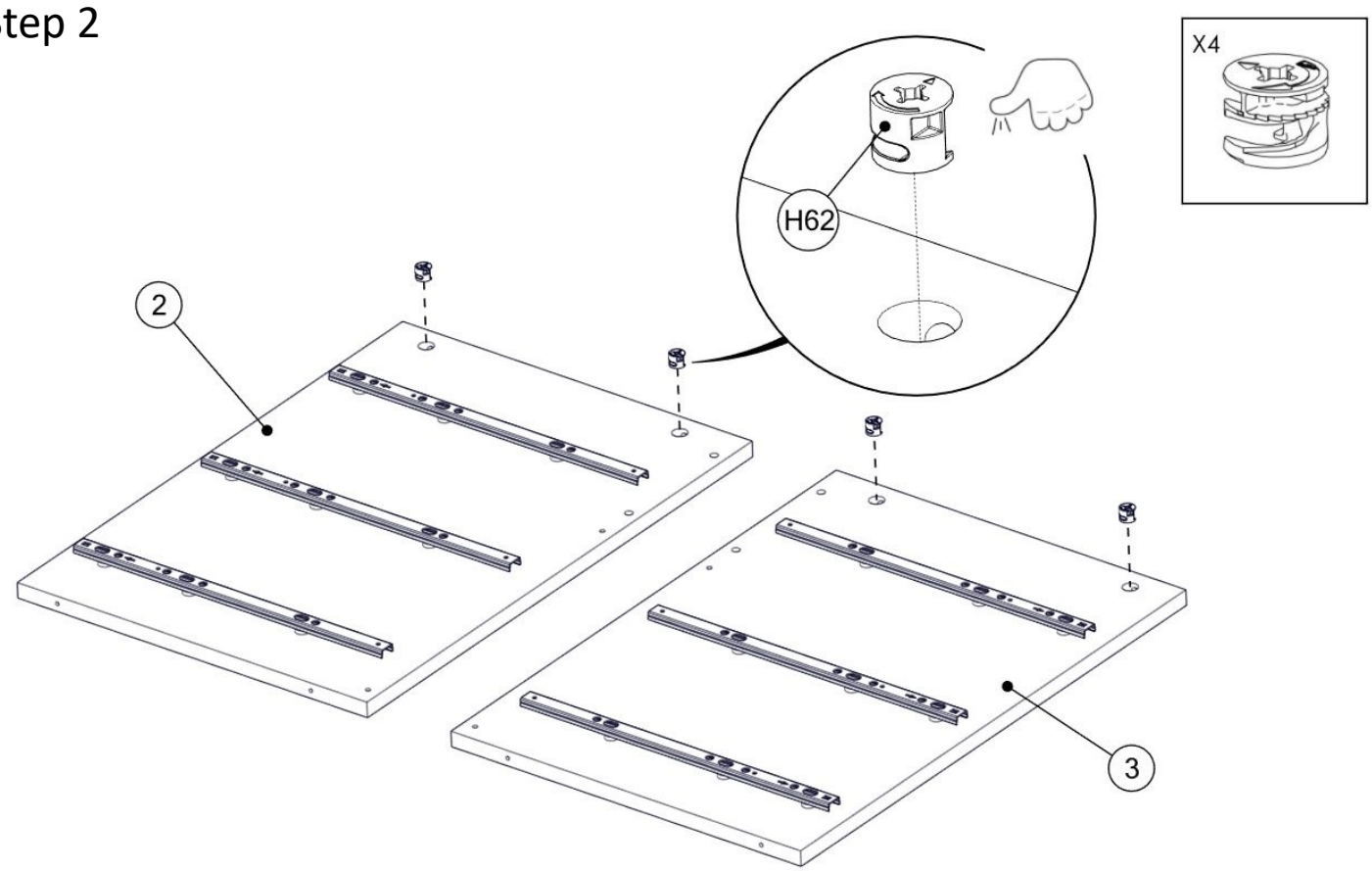

Step 3

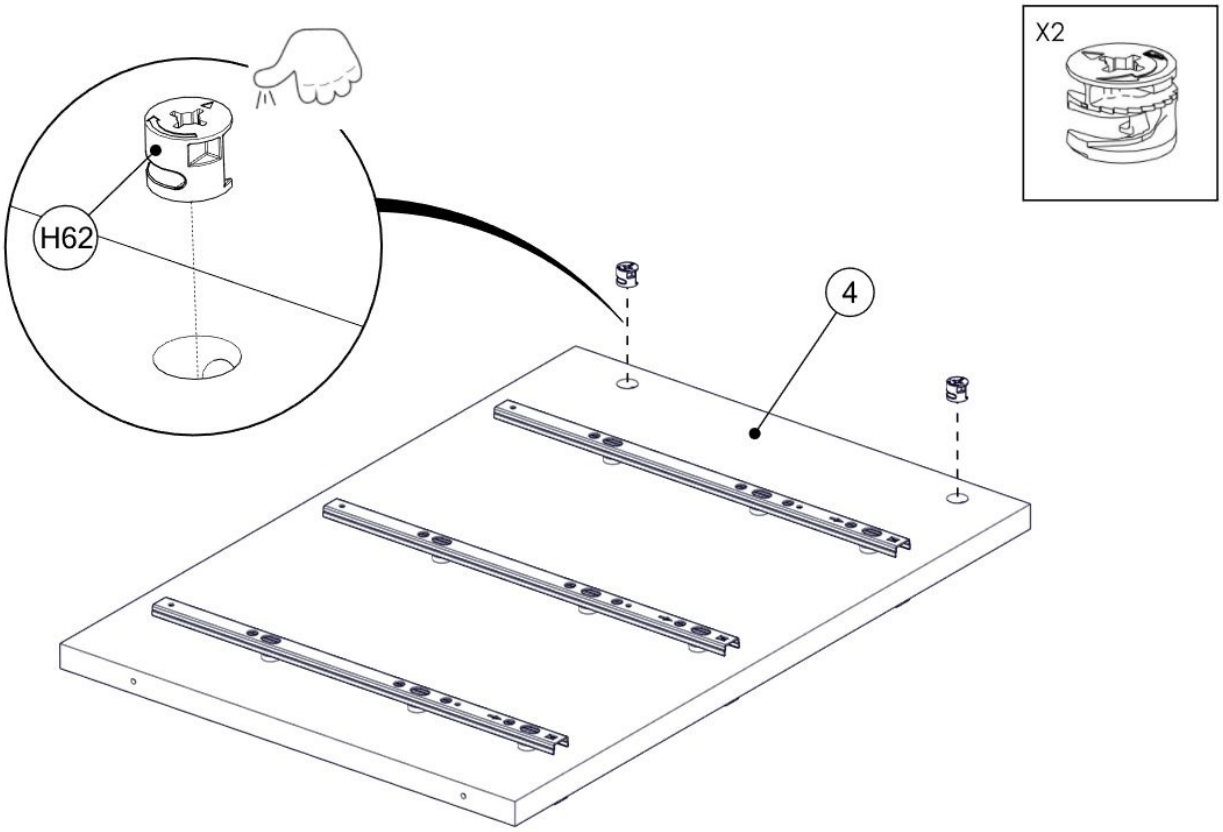

Step 4

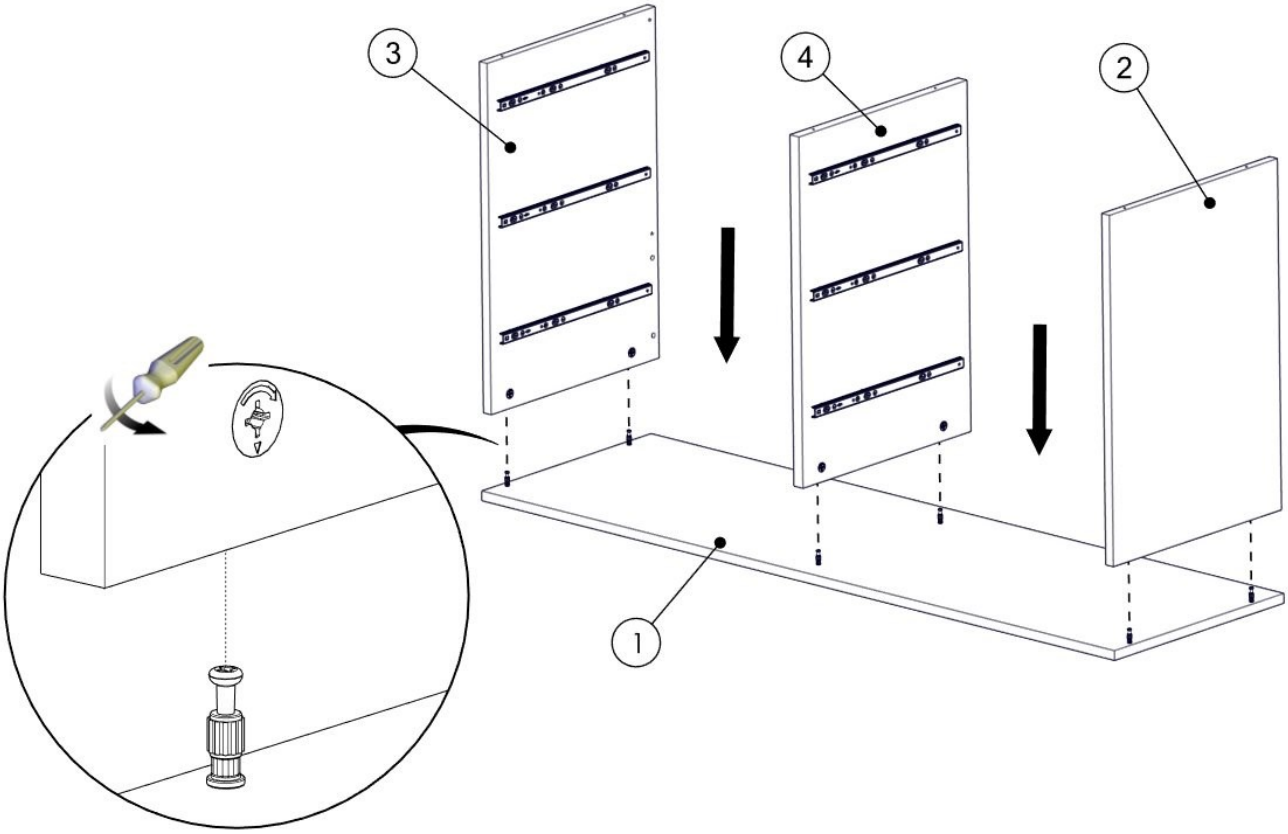

Step 5

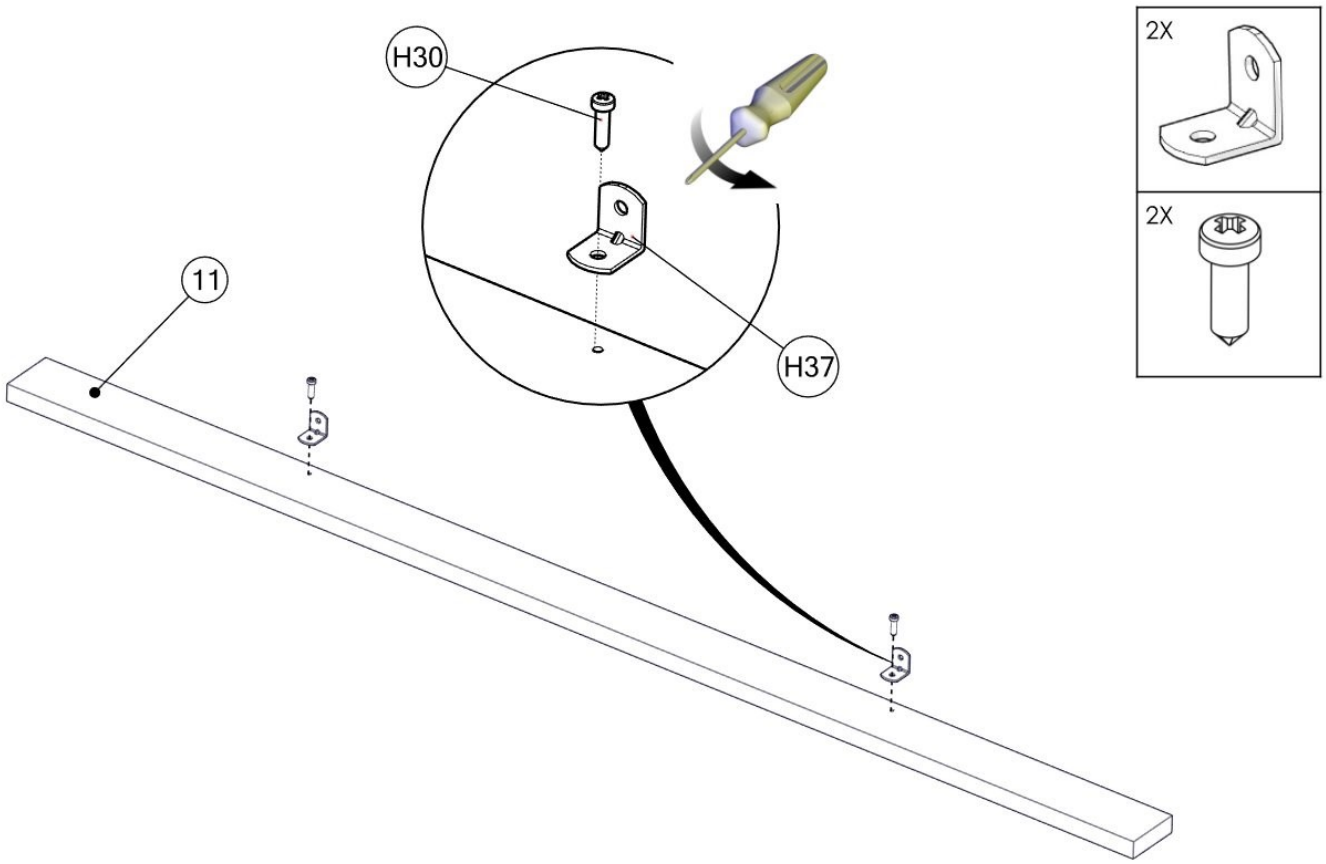

Step 6

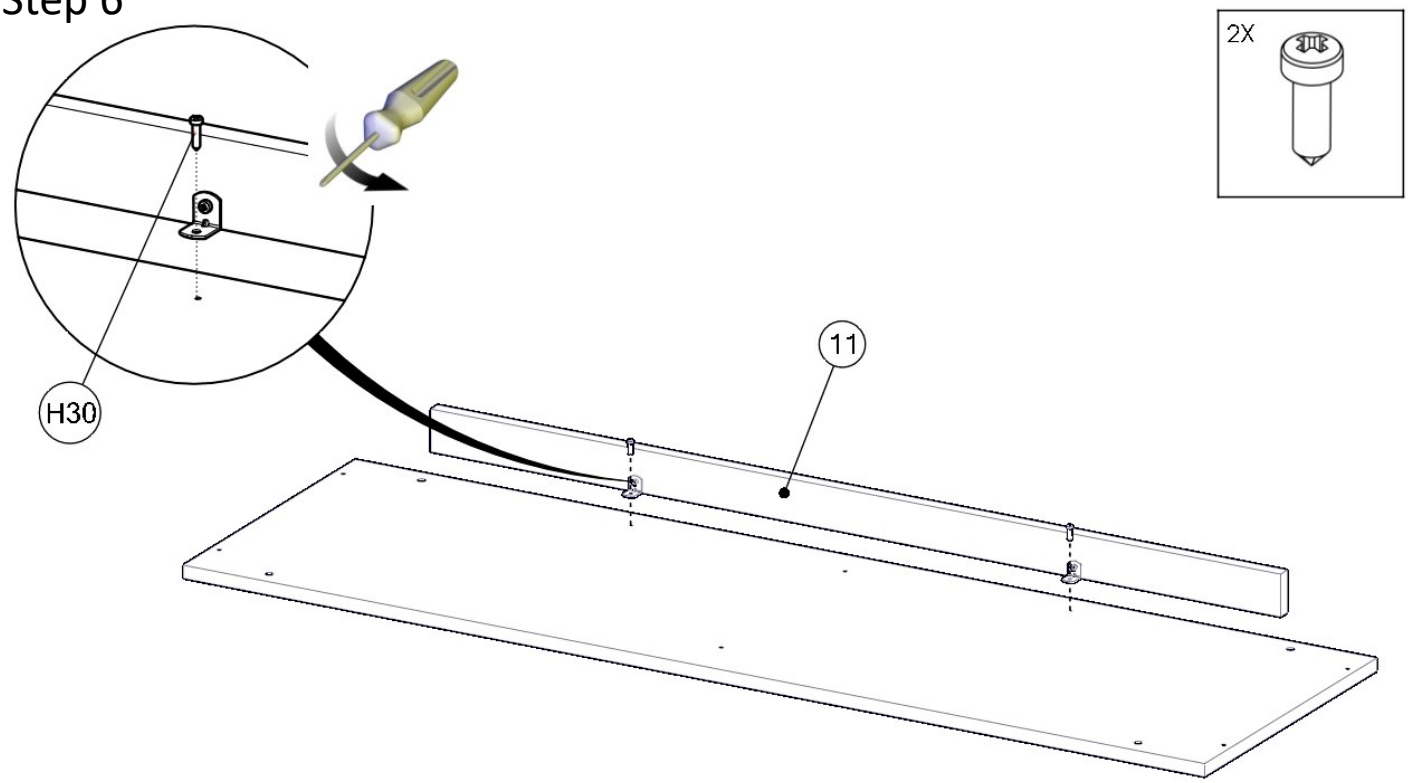

Step 7

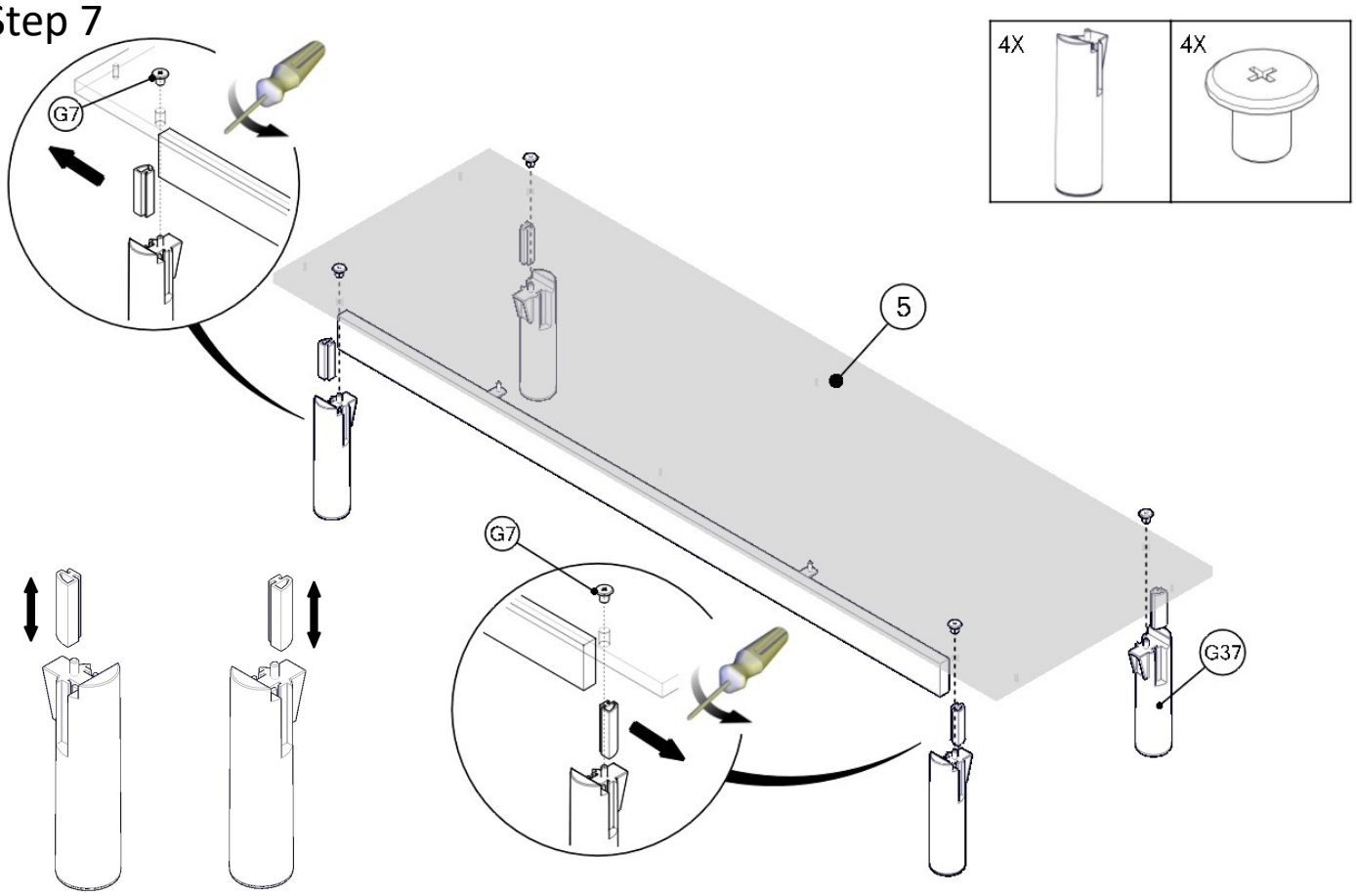

Step 8

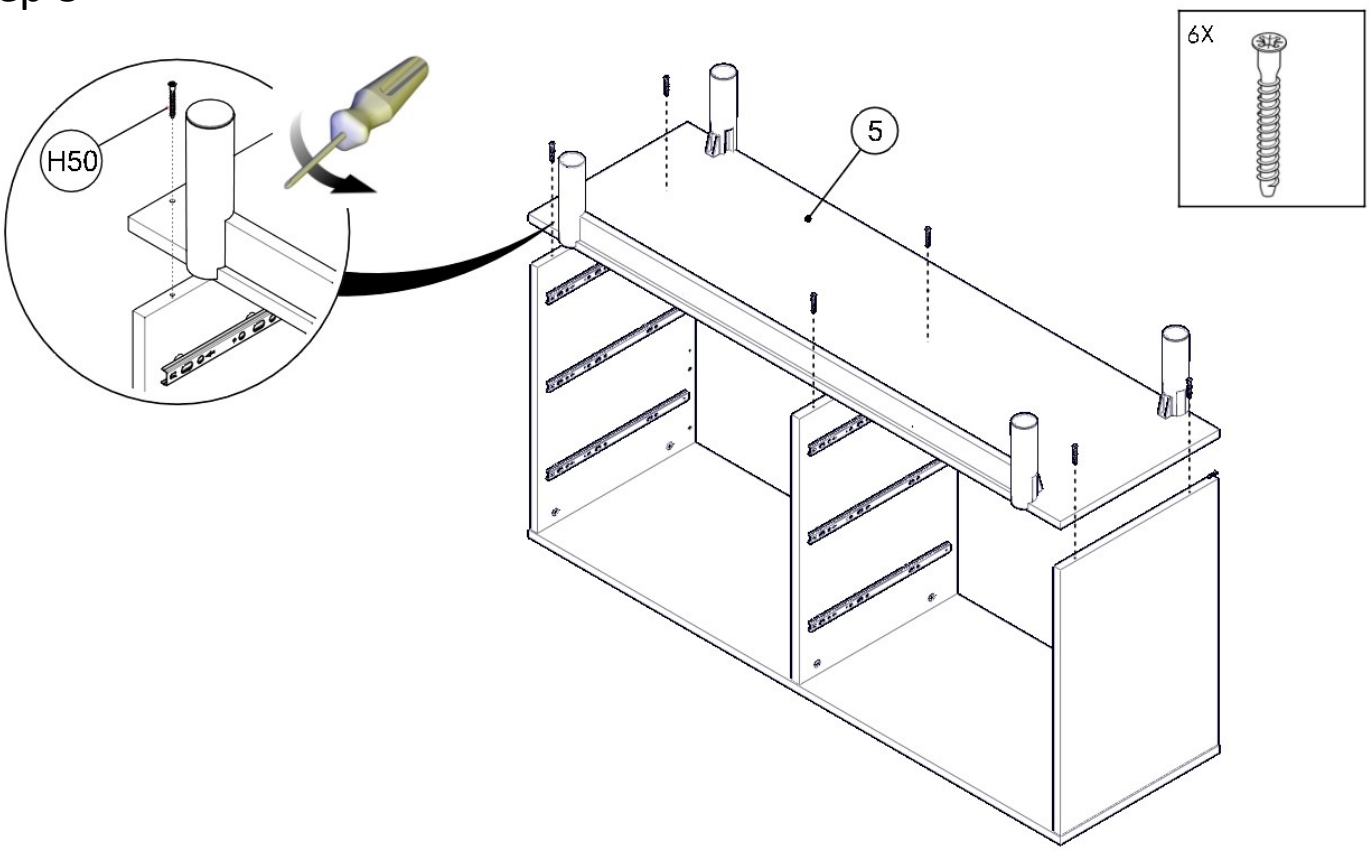

Step 9

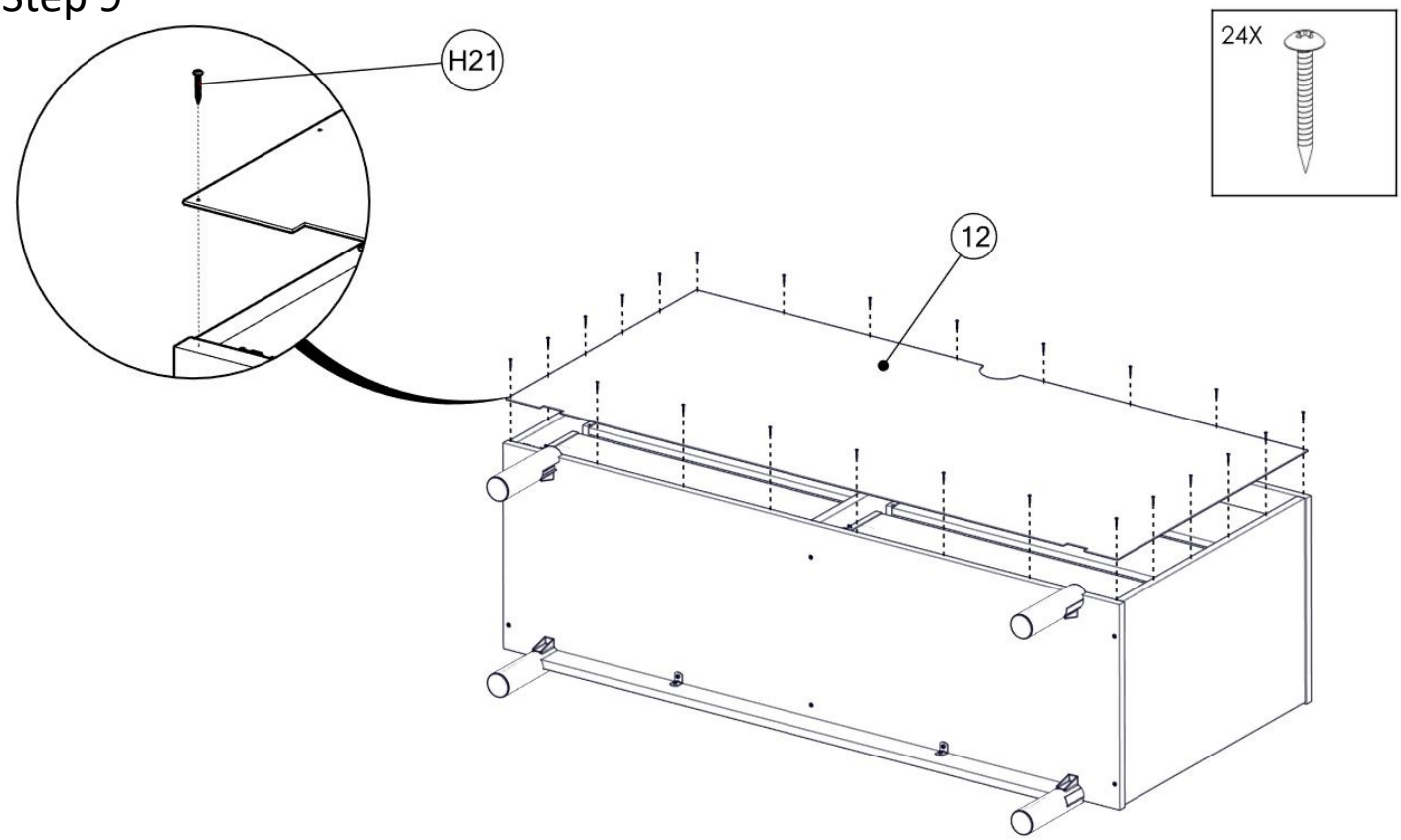

TIP KIT WALL ANCHORING INSTALLATION

Option 1:
- Locate stud in wall. Screw strap (-H79-) into stud using long screw (-H82-) and washer (-H78-).

Option 2:
- Drill through wall board using ¼ inch drill bit.
- Insert wall anchor (-H81-).
- Screw strap (-H79-) into wall anchor using long screw (-H82-) and washer (-H78-).

OPTION 1.

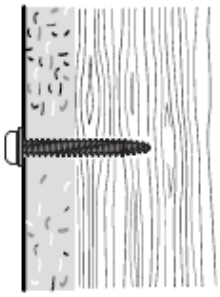

INSTALACION DEL ANCLA DE PARED.

Opcion 1:
- Localice la viga en la pared.
  Atornille la correa (-H79-) usando el tornillo largo (-H82-) y la arandela (-H78-).

Opcion 2:
- Perfore la pared usando una broca de ¼ de pulgada.
- Inserte el ancla de pared (-H81-)
- Atornille la correa (-H79-) al ancla de pared usando el tornillo largo (-H82-) y la arandela (-H78-).

OPTION: 2.

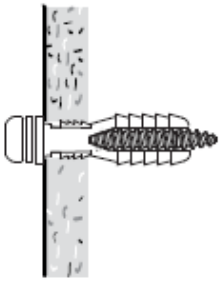

CONSEILS POUR L'INSTALLATION D'ANCRAGE MURAL

Option 1:
- Visser le panneau mural dans le goujon comme indiqué (-H79-) (-H82-) (-H78-)

Option 2:
- Percez le trou 1/4" dans le panneau mural et installez l'ancrage mural. Fixer la vis à l'ancre murale installée comme indiqué (-H81-) (-H79-) (-H82-)

Step 10

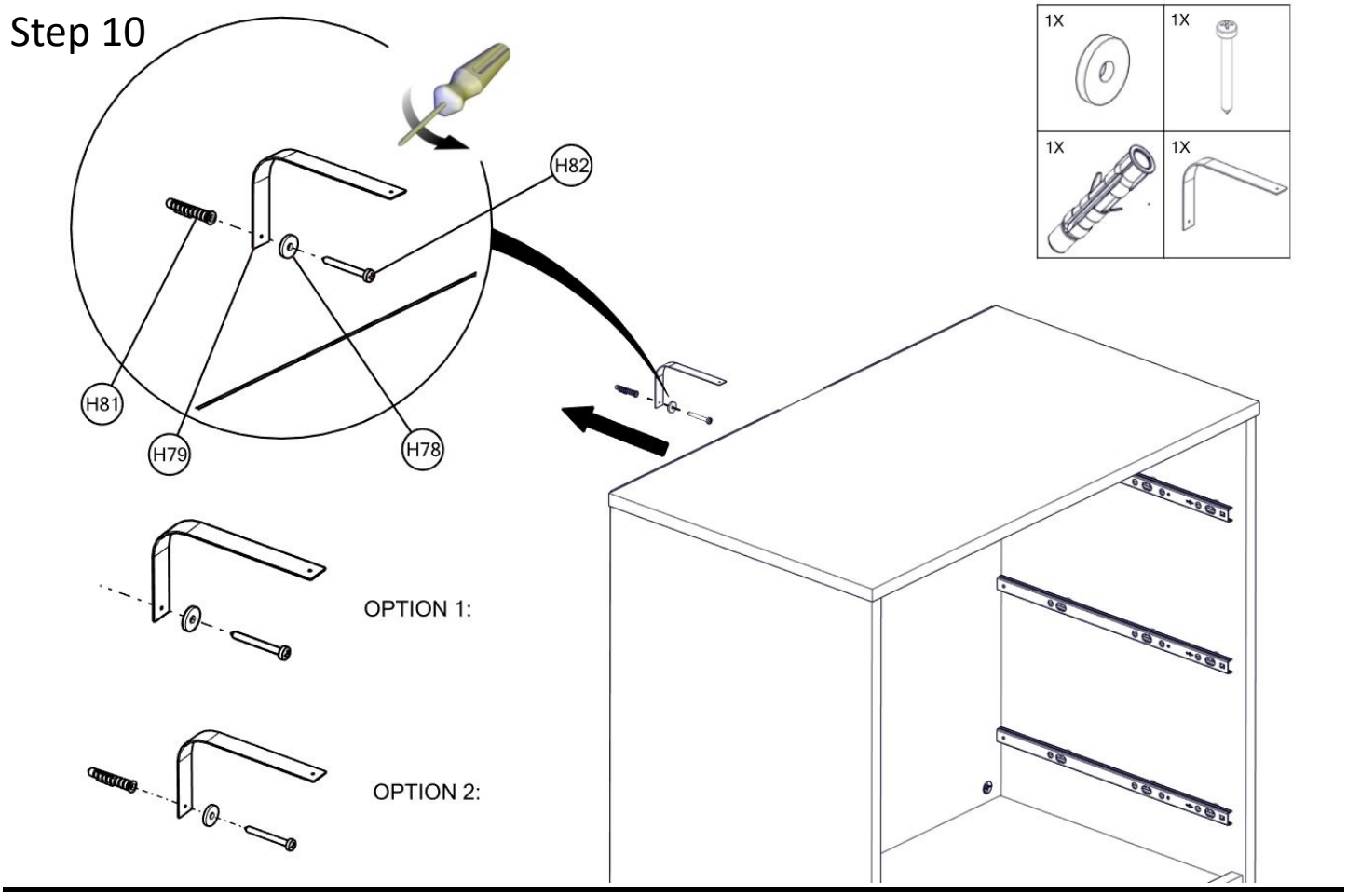

Step 11

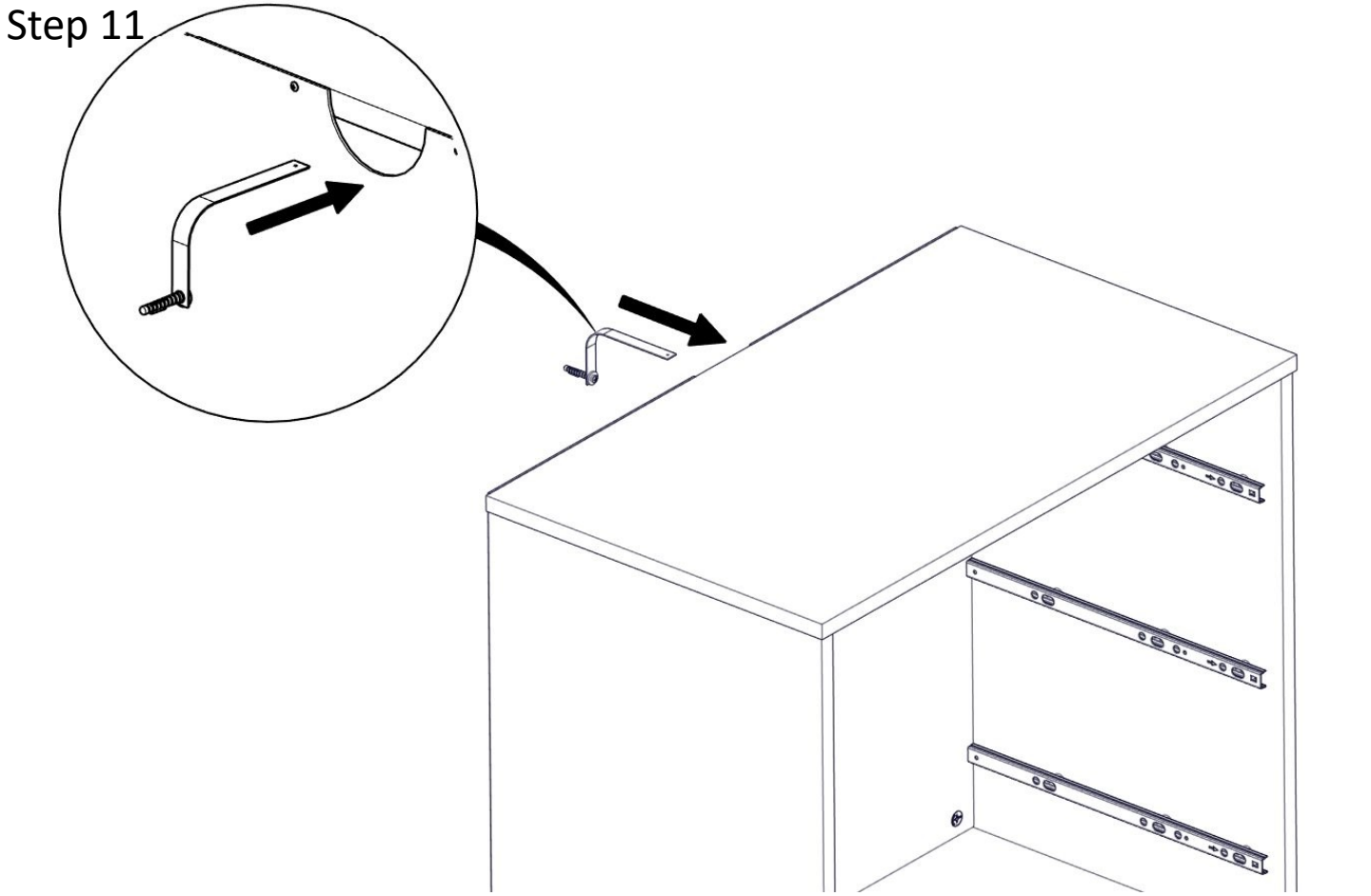

Step 12

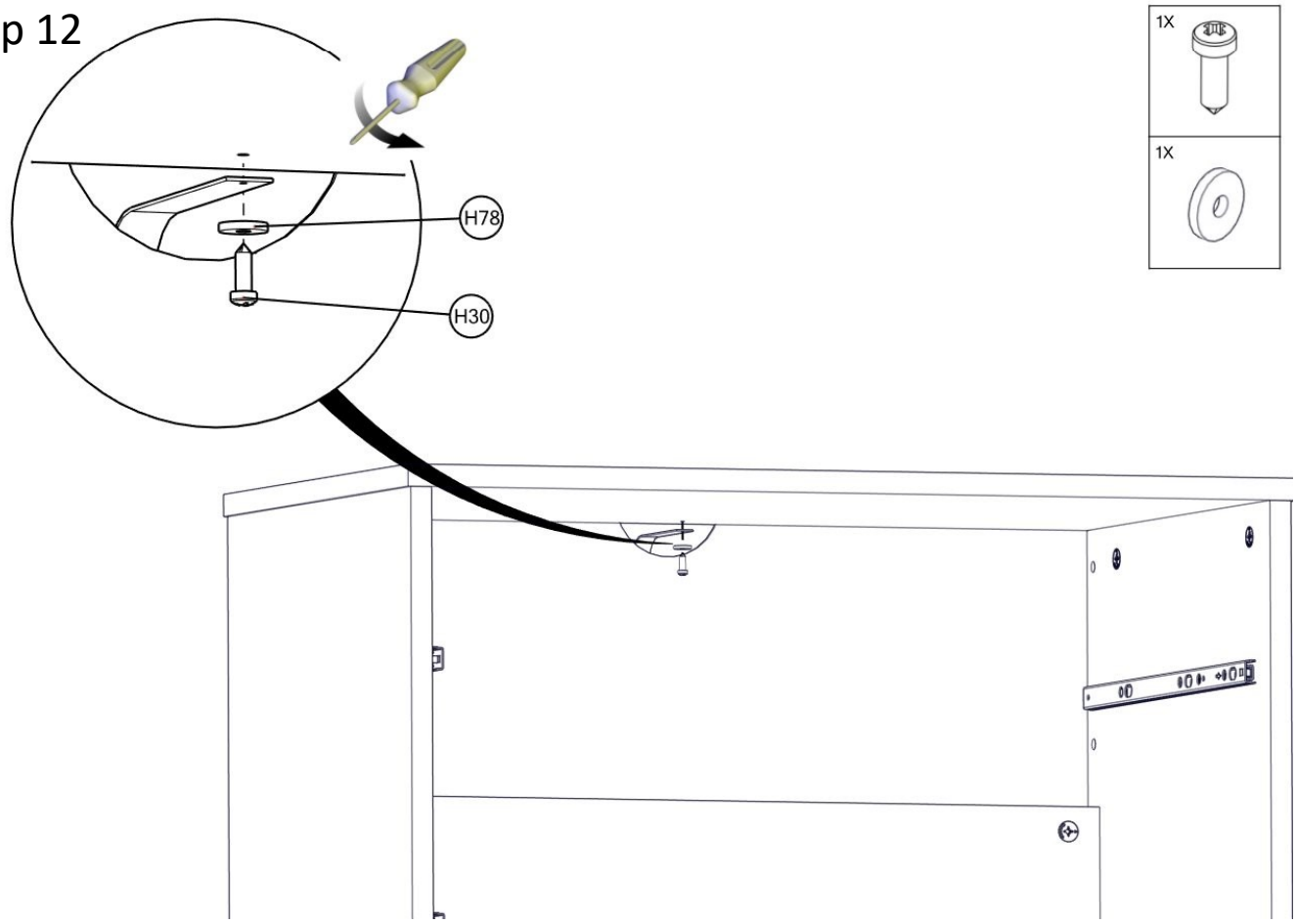

Step 13

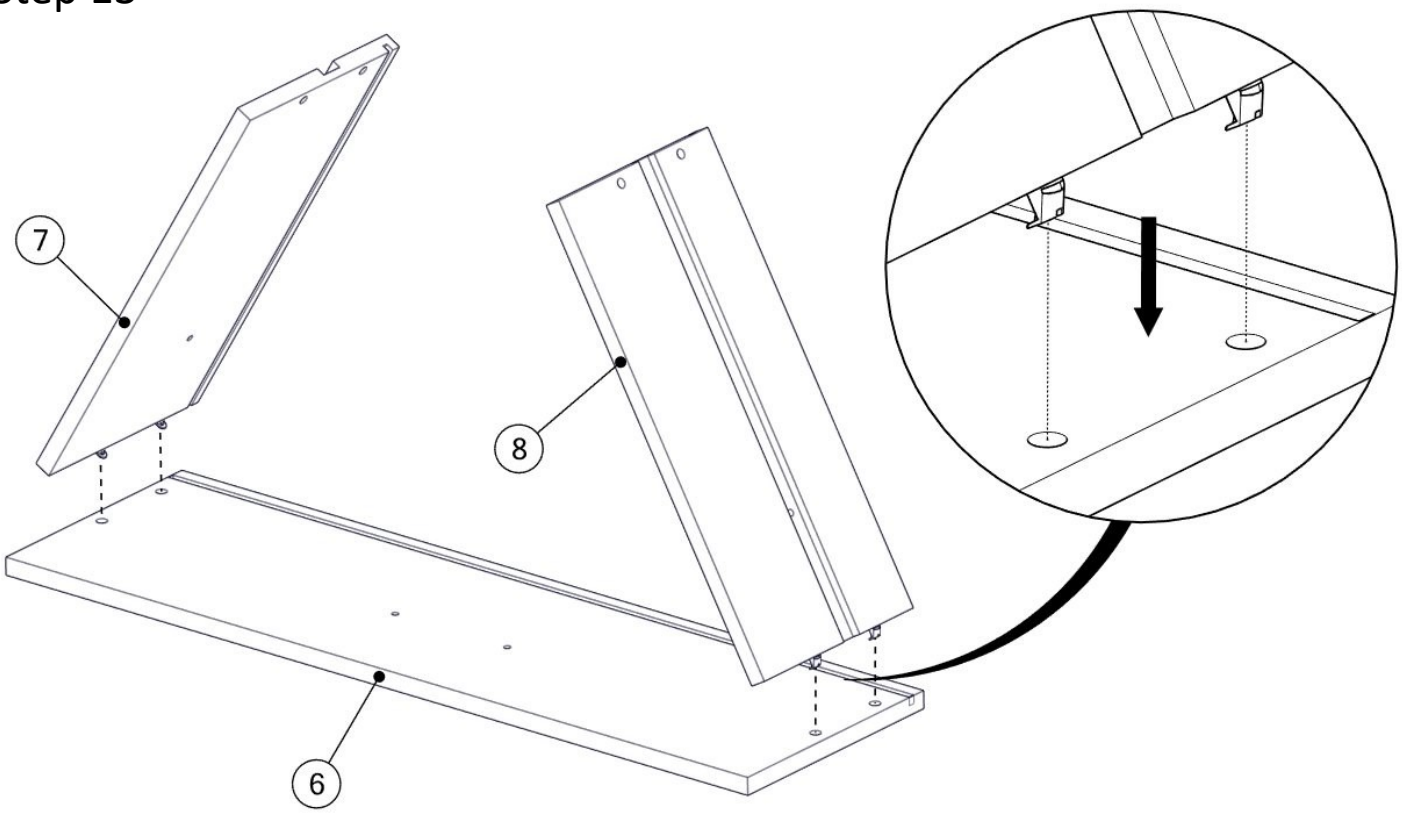

Step 14

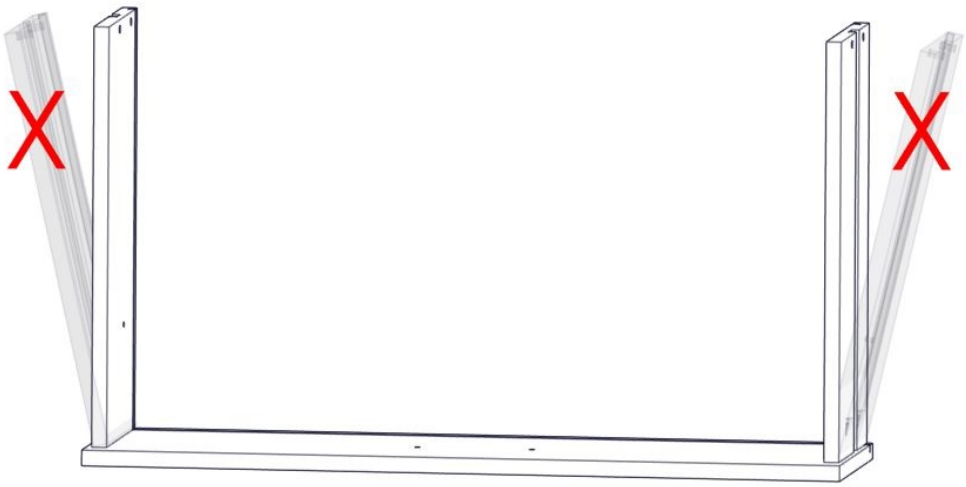

Do Not Overextend, risk of Damage!
No sobreextender, riesgo de daños!
Ne pas prolonger, risque de dommages!
Overbelast niet, risico op schade!

Step 15

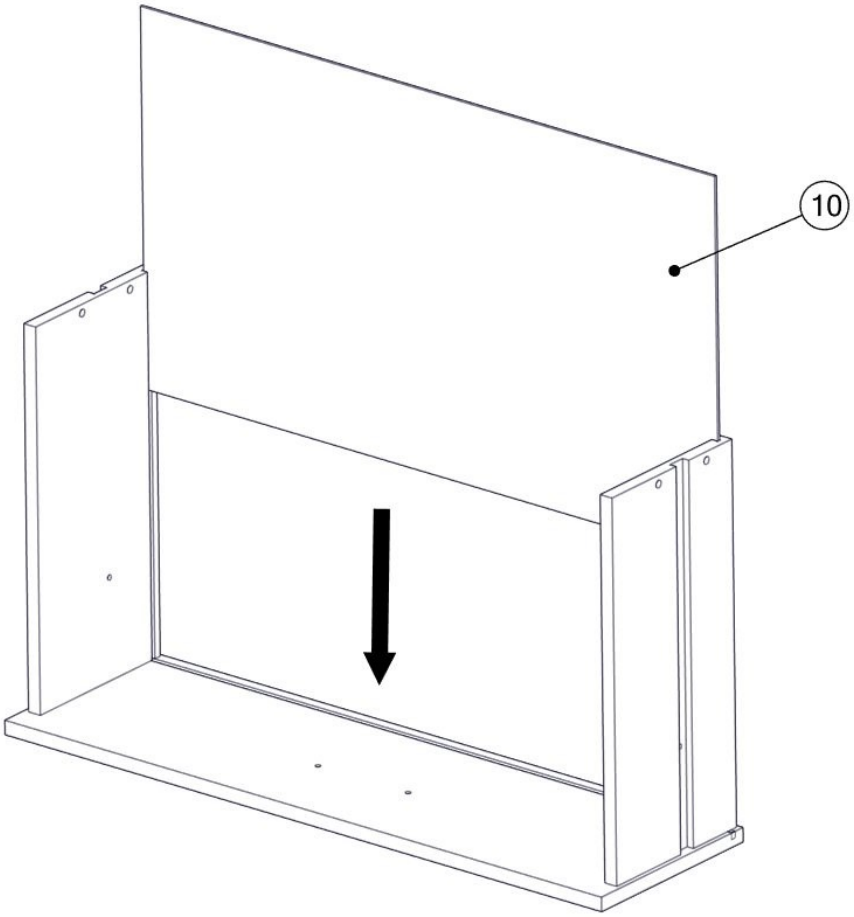

Step 16

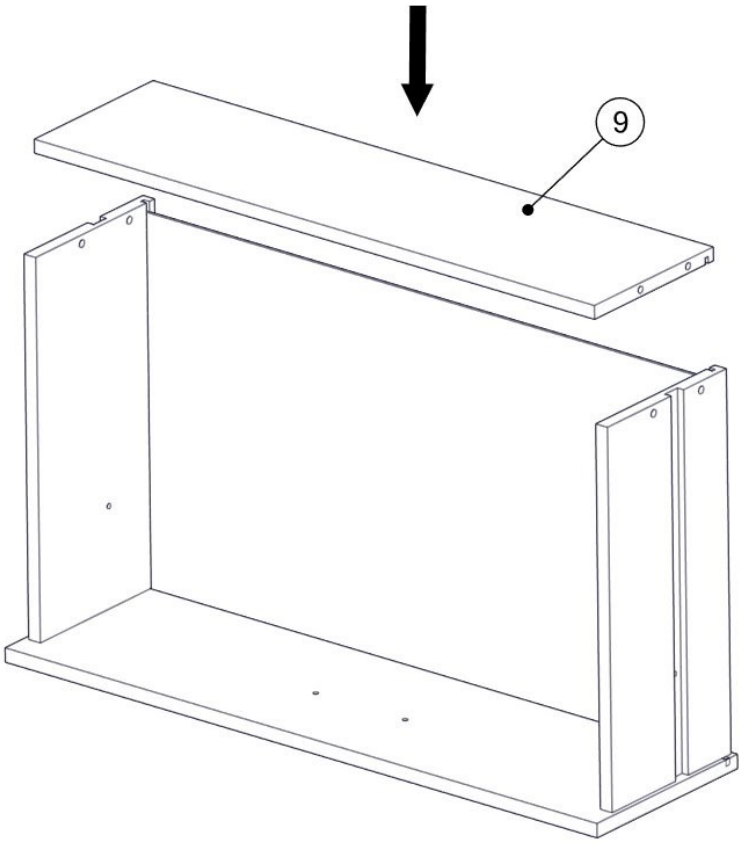

Step 17

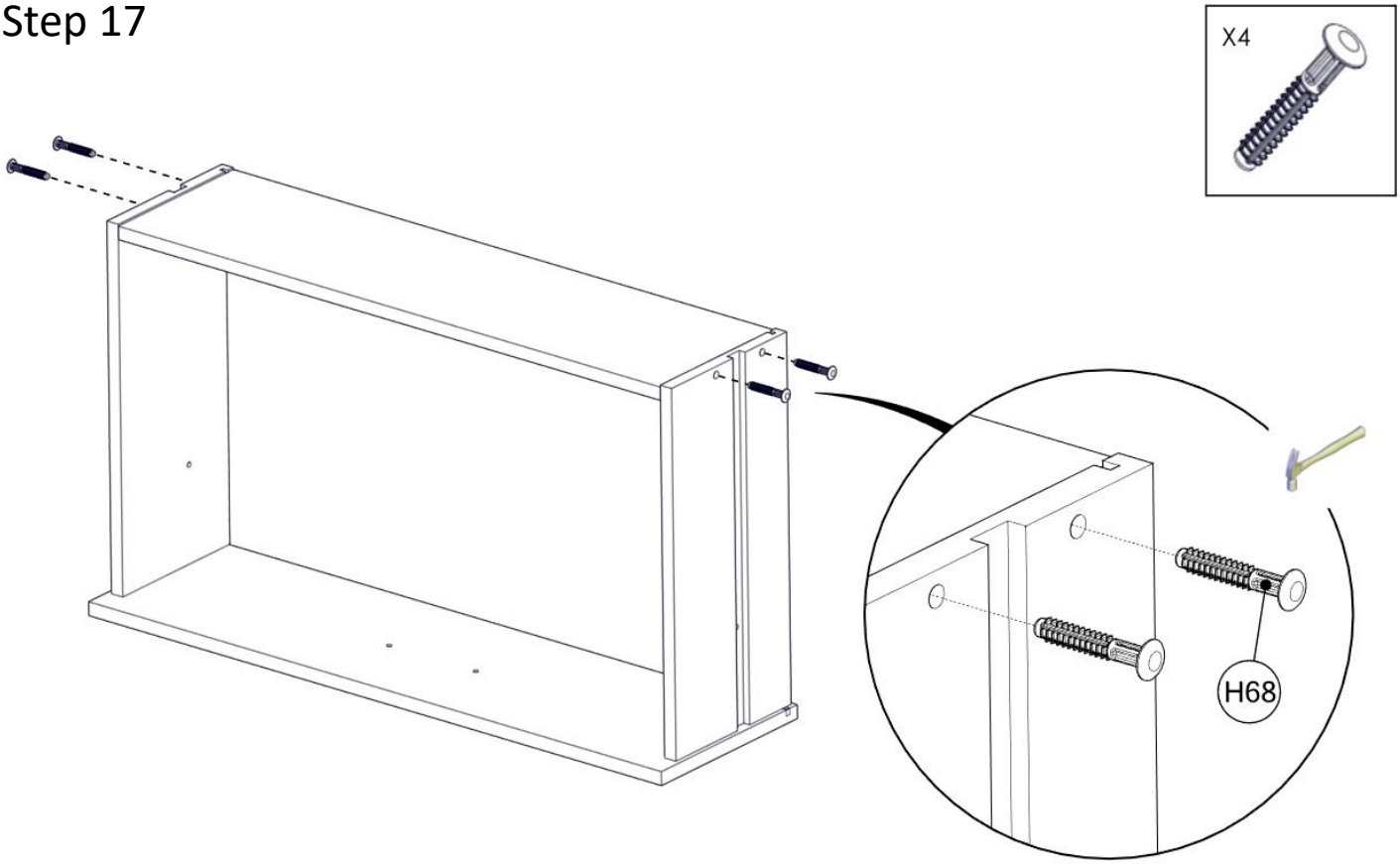

Step 18

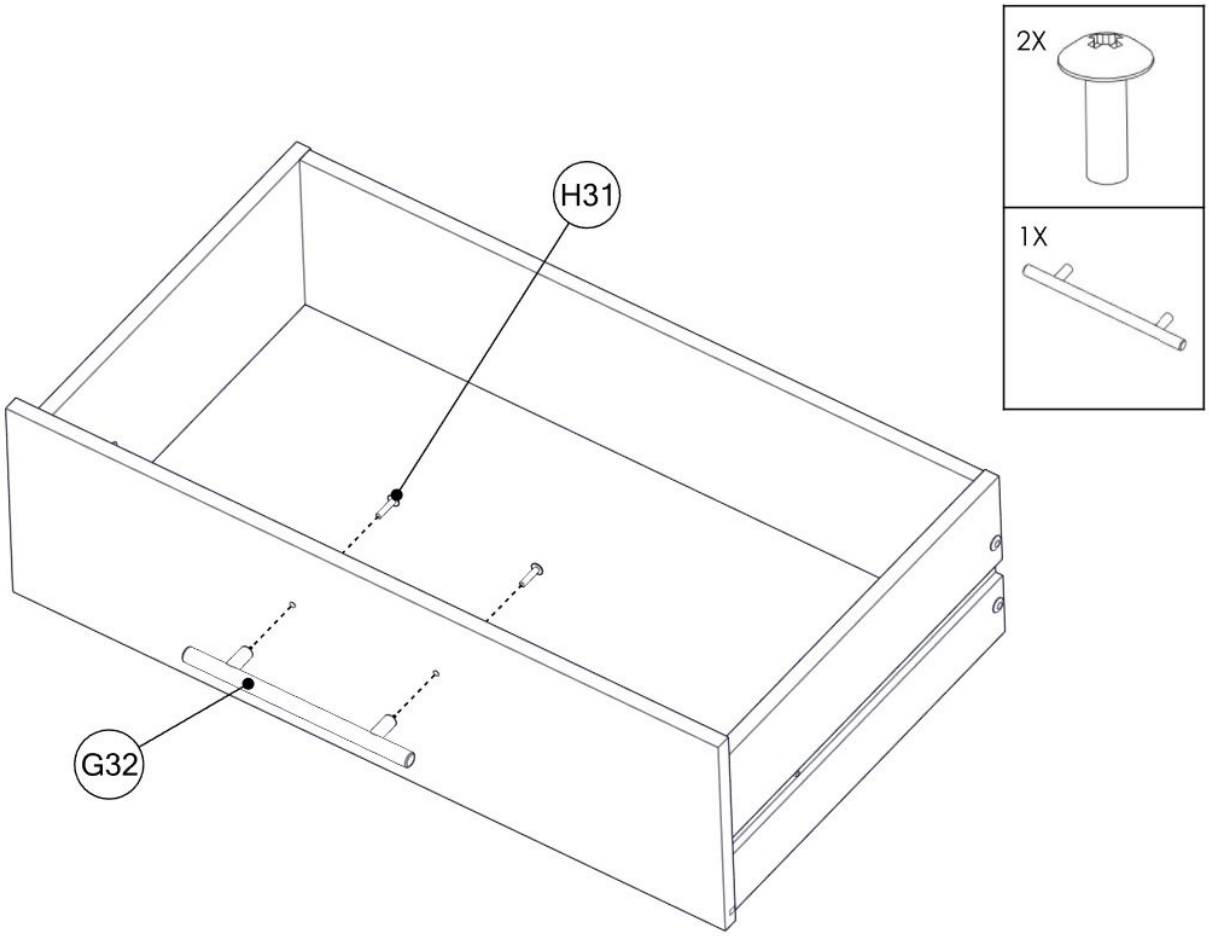

Step 19-21

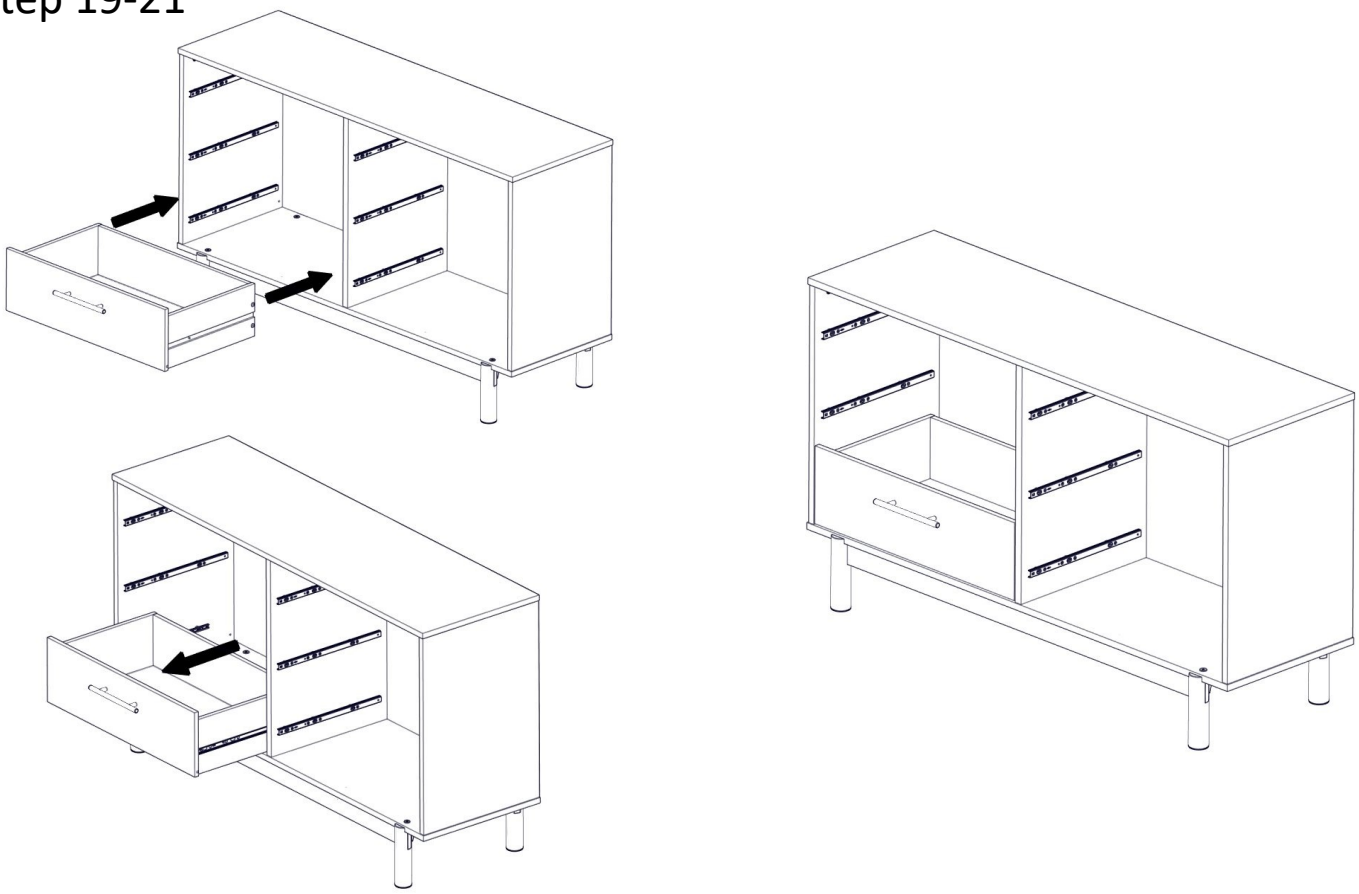

Step 22

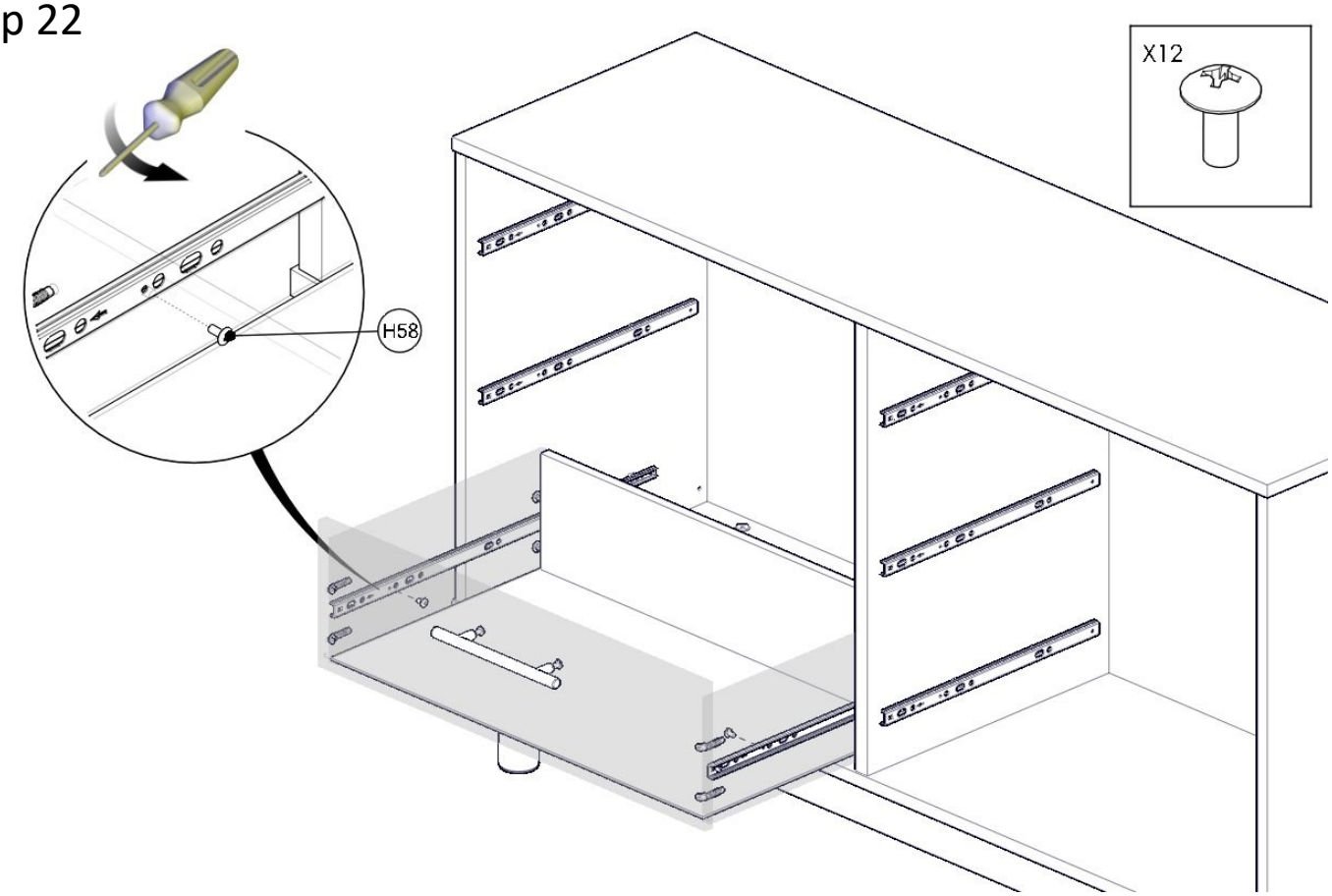

Warranty Information

LIMITED WARRANTIES

The following Limited Warranties are given only to the original retail purchaser, subject to all the terms and conditions below. These Limited Warranties are non-transferable:

Ashley Furniture Industries, Inc. (the "Warrantor), subject to all the limitations and exclusions described in these Limited Warranties, warrants the following products and parts against material manufacturing defects for the duration set forth next to that product or part in the table below.

Product or Part	Limited Warranty Duration	Labor Coverage
Frames Used In Upholstered and Leather Products	Limited Lifetime Warranty*	1 Year
Springs The metal spring systems are generally, sinuous, wire seat springs, and, where applicable, back springs	5 Year Limited Warranty	1 Year
Recliner Mechanisms	3 Year Limited Warranty	1 Year
Sleeper Mechanisms	3 Year Limited Warranty	1 Year
Unattached Cushioning** Unattached Cushion means each cushion core in an unattached (loose) seat cushion.	1 Year Limited Warranty	1 Year
Attached Cushioning** Attached Cushion means each cushion core in a seat cushion which is attached to the product	1 Year Limited Warranty	1 Year
Leather and Upholstery Fabric***	1 Year Limited Warranty	1 Year
Top of Bed Top of Bed means comforters, bed skirts, pillow shams, and any accent pillows included with a comforter set.	30 Days	30 Days
Finishes and all Other Furniture Products Finishes and all Other Furniture Products means all finishes and other parts, components, and other furniture products not specifically included in the above Limited Warranties, including but not limited to dining room tables, chairs, occasional tables, beds, dressers, sleeper mattresses, marble tops, granite tops, desks, curio cabinets, china cabinets, buffets, entertainment centers, lamps, electrical components (other than light bulbs), recliner pull cords and handles incorporated into any furniture product.	1 Year Limited Warranty	1 Year

*As used in these Limited Warranties, "lifetime" means the normal useful life of the product under reasonable use.

**All seat cushion cores in both Unattached Cushioning and Attached Cushioning will soften with normal use and will conform to the shape of the user. This shall be considered normal wear, and shall not be considered a loss of resiliency or a material manufacturing defect.

***The Leather and Upholstery Fabric Limited Warranty also includes seam slippage, cracking, and dye transfers. Leather is a natural product, and, as such, each hide will reflect its own individuality. Some variations of shade and tone are to be expected as are the nicks, scratches, and wrinkles that only occur in genuine leather; these characteristics are in no way to be considered a defect. These Limited Warranties do not cover tears, flattening of nap, pilling, fading, or shrinking and is not valid when heavy soiling or abuse is evident. These Limited Warranties also do not cover protective finishes, velvets, and velvet types, since by their very nature, these fabrics are of soft texture and will crush, shade and mark more readily than most fabrics; these characteristics are in no way to be considered a defect.

LIMITATIONS AND EXCEPTIONS

The following limitation and exceptions apply to the Limited Warranties:

Remedy

Under these Limited Warranties, for all of its products other than an Unattached Cushion (as defined in the topical heading "Unattached Cushioning"), the sole liability of Warrantor is limited to repair, or at its option, replacement the applicable product or part not in conformity with these Limited Warranties. REFUNDS ARE NOT AVAILABLE. If within the warranty period, identical materials are unavailable at the time of repair or replacement, Warrantor reserves the right to substitute materials of equal or better quality. Replacement fabrics may vary in color from the original due to dye lot differences.
In addition, during the period of any applicable Labor Coverage, Warrantor will pay, within one year from the date of purchase, reasonable and customary labor rates to repair or replace the defective parts (at Warrantor's option) and shipping costs from the retailer to and from Warrantor, at no charge to the original retail purchaser. After the expiration of the Labor Coverage or for all products or parts not covered by Labor Coverage, the original retail purchaser will be responsible for labor, packing, and all shipping and transportation costs. The costs associated with transporting the furniture or parts from your home to the retailer or from the retailer to your home are excluded from all Limited Warranties.

For Unattached Cushions with a material manufacturing defect, Warrantor will replace the defective Unattached Cushion provided that the original retail purchaser during the warranty period (i) complies with the Claim Procedure set forth in these Limited Warranties and (ii) if requested by Warrantor, returns the defective cushion core contained within an Unattached Cushion to Roomsolutions Brand, Attn: Director of Quality, One Ashley Way, Arcadia, WI 54612. The remedy specified in this paragraph is Warrantor sole liability related to Unattached Cushions.

Any item repaired or replaced under these Limited Warranties will be covered by the Limited Warranties for the remainder of the original warranty period only.

All Products

These Limited Warranties do not apply to (i) rented, business, commercial, institutional, or other non-residential uses, (ii) merchandise that was, at any time, used as a floor sample or display model, (iii) any merchandise purchased "as is" or second-hand, (iv) any merchandise purchased at a distress sale or a going-out-of business sale, (v) any merchandise purchased from a liquidator, or (vi) merchandise obtained from a rental retailer. All warranties, whether express or implied, cover only normal household usage. No warranty, express or implied, applies to any condition resulting from misuse, abuse, delivery or transportation damage, nor any condition resulting from incorrect or inadequate maintenance, cleaning or care. These Limited Warranties are null and void if furniture has been moved from original point of delivery to consumer.

Chemical Treatments

These Limited Warranties do not cover damages or defects caused by use of chemical treatments or protective coatings on the finish, leather, or upholstered fabric by the retailer or the original retail purchaser, and any such chemical treatments or protective coatings voids all warranties of Warrantor.

Leather, Upholstered Fabric and Finishes

The Limited Warranties on "Leather", "Upholstered Fabric" and "Finishes and all Other Furniture Products" do not cover (i) damages resulting from excessive soiling, improper or unapproved cleaning methods, (ii) fading or other damages resulting from exposure to sunlight, (iii) damages resulting from household humidity, or (iv) damages resulting from any liquid, including but not limited to alcohol and water. CAUTION: Any use of improper or unapproved cleaning methods voids all warranties of Warrantor.

Modifications to Products

These Limited Warranties do not apply to any products that have been altered by any person, dealer, or company without the express written authorization of Warrantor.

Implied Warranties

IMPLIED WARRANTIES, INCLUDING ANY OF MERCHANTABILITY AND FITNESS FOR A PARTICULAR PURPOSE IMPOSED ON THE SALE OF THIS FURNITURE AND ITS PARTS UNDER STATE LAW, ARE LIMITED IN DURATION TO THE WARRANTY PERIOD AND NO WARRANTIES APPLY AFTER THAT PERIOD. SOME STATES DO NOT ALLOW LIMITATIONS ON HOW LONG AN IMPLIED WARRANTY LASTS, SO THE ABOVE LIMITATIONS MAY NOT APPLY TO YOU.

DISCLAIMER

NO OTHER EXPRESS WARRANTY HAS BEEN MADE OR WILL BE MADE ON BEHALF OF WARRANTOR WITH RESPECT TO THE FURNITURE AND ITS PARTS, OR THE OPERATION, REPAIR, OR REPLACEMENT OF THE FURNITURE AND ITS PARTS. FURTHERMORE, NO REPRESENTATIVE OF WARRANTOR OR ITS DISTRIBUTORS OR RETAILERS IS AUTHORIZED TO MAKE ANY CHANGES OR MODIFICATIONS TO THESE LIMITED WARRANTIES.

SOME RETAILERS OFFER EXTENDED OR ADDITIONAL WARRANTIES, INCLUDING BUT NOT LIMITED TO EXTENDED OR ADDITIONAL FABRIC WARRANTIES, EITHER FROM THE RETAILER OR THROUGH A THIRD-PARTY. WARRANTOR SHALL NOT BE LIABLE UNDER ANY EXTENDED OR ADDITIONAL WARRANTIES OFFERED BY ANY RETAILER OR THROUGH A THIRD-PARTY UNDER ANY CIRCUMSTANCES.

IN NO EVENT SHALL WARRANTOR BE RESPONSIBLE FOR CONSEQUENTIAL OR INCIDENTAL DAMAGES, SUCH AS LOSS OF USE, INCONVENIENCE, LOSS OR DAMAGE TO PERSONAL PROPERTY, WHETHER INDIRECT OR DIRECT, AND WHETHER ARISING IN CONTRACT OR TORT EVEN IF IT HAD REASON TO KNOW IN ADVANCE THAT SUCH DAMAGES WERE POSSIBLE. SOME STATES DO NOT ALLOW THE EXCLUSION OR LIMITATION OF INCIDENTAL OR CONSEQUENTIAL DAMAGES, SO THE FOREGOING LIMITATION OR EXCLUSION MAY NOT APPLY TO YOU.

IN NO EVENT SHALL WARRANTOR'S RESPONSIBILITY EXCEED THE PURCHASE PRICE OF THE PRODUCT OR ITS REPLACEMENT.

This warranty gives you specific legal rights, and you may also have other rights that vary from state to state.

CAUTION

Motion furniture (recliners, sleeper sofa, etc.) has many moving parts. Caution must be used in operation (opening, closing, etc.). Children should not be allowed to play on or operate motion furniture. Always leave recliners in an upright and closed position and keep hands and feet clear of mechanism. Only the occupant should operate it.

CLAIM PROCEDURE

To obtain warranty services, the original retail purchaser must comply with the requirements of this Claim Procedure.

Contact the Roomsolutions authorized retailer from whom you purchased your furniture, to obtain warranty service. All claims must include the original bill of sale, the product serial number, and be filed within the applicable warranty period. Warrantor reserves the right to require defective parts be returned upon request. You must make arrangements with the retailer to schedule the transportation of the furniture or parts from your home to the retailer or from the retailer to your home. If the retailer from which you purchased the furniture has closed and you need service, contact Ashley in writing or call our Customer Service.

Signature Design Brand Warranty and Retailer Information

Statesville RTA
Attn: Consumer Affairs
607 Meacham Road
Statesville, NC 28677
Customer Service Phone Number: 1-800-668-0490

© April 2012, Ashley Furniture Industries, Inc. All rights reserved.

Signature Design is a registered trademark of Ashley Furniture Industries, Inc.