Assembly Instruction for
Swivel Counter Chair
D-20670-5-CSC

Caution: Please read instructions thoroughly before unpacking assembly parts. Sharp, exposed staple tips can cause injury, therefore, for your protection, please remove any exposed staples used in packing.

1. We recommend that you should assemble this product with the assistance of another person; this will make assembly easier, and will help to eliminate damage to the product or injury to persons during assembly.
2. Be sure to check all packing materials carefully for small parts that may have come loose inside the carton during shipment.
3. Please do not over tighten screws or bolts.
4. Please Put all parts on a non-abrasive floor before assembly, and follow the assembly steps to assemble your newly purchased product correctly and efficiently.

PART LIST			
No.	PART DESC	CODE.	Q'TY
A	SEAT CUSHION WITH FRAME	PD-20670-5-CSCSEC	1
B	LEFT/RIGHT LEG FRAME	PD-20670-5-CSCLEG	2
C	FRONT/BACK STRETCHER	PD-20670-5-CSCSTR	2

HARDWARE LIST			
NO.	HARDWARE DESC	CODE.	Q'TY
1	ALLEN BOLT (5/16"x2")	PD-20670-CSCHW	4
2	SPRING WASHER(5/16")		4
3	FLAT WASHER (5/16"x3/4")		4
4	SCREW (#4x2")		4
5	ALLEN KEY(M5)		1

⚠ Only tighten all bolts when all bolts aligned with bolt inserts.

TOOLS REQUIRED (NOT PROVIDED)
Phillips Screw Driver

STEP : 1

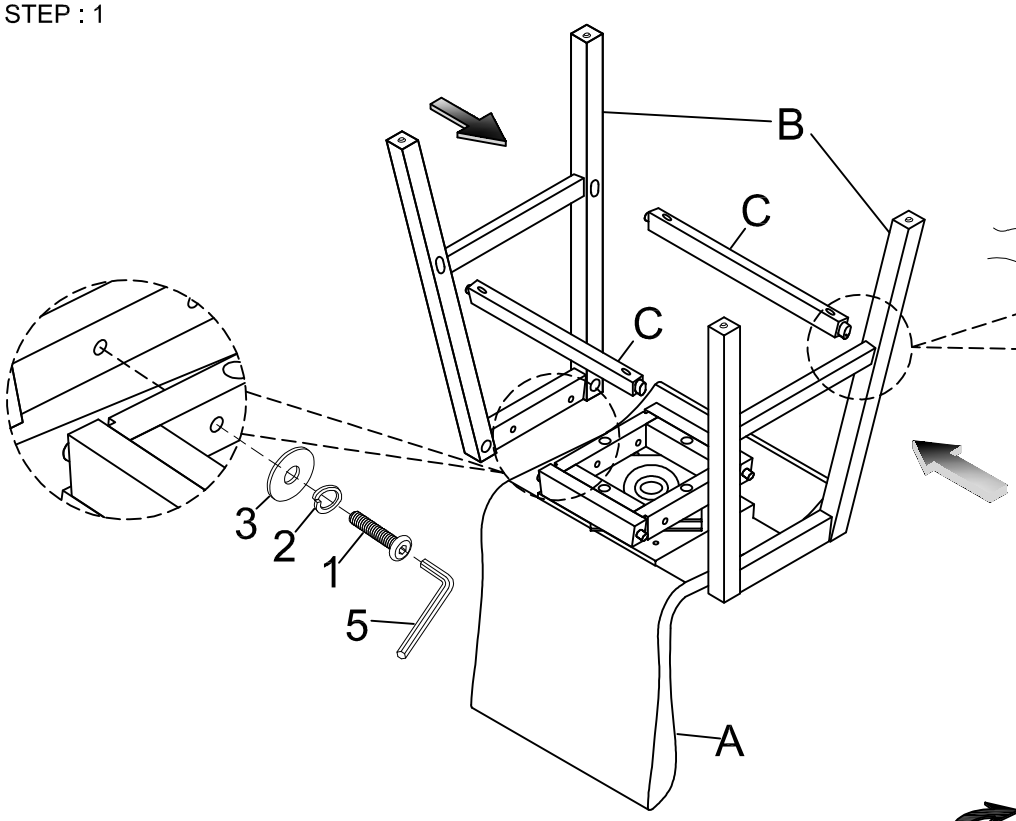

STEP : 2

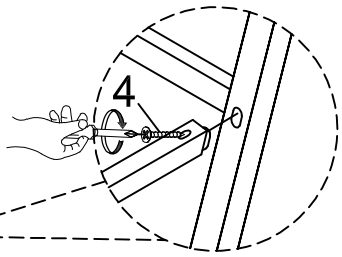

COMPLETED

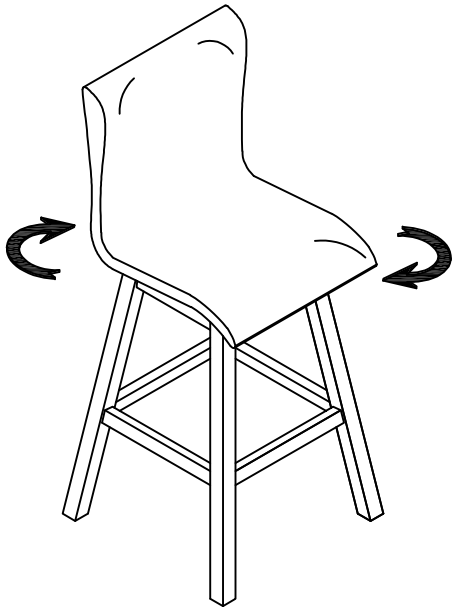

MADE IN VIETNAM