HOME SOLUTIONS - COOKING

LREN6321VE

6.3 cu. ft. Electric Single Smart Range with Air Fry, Fan Convection®, EasyClean® and Premium Handle

KEY FEATURES

- 6.3 cu. ft Capacity
- Fan Convection® with Air Fry
- EasyClean®
- WideView™ Window
- LG ThinQ® with ThinQ Care
- Storage Drawer

AVAILABLE COLORS

STAINLESS STEEL

ENERGY STAR

SMART APPLIANCE

ThinQ Care

Proactive Smart Alerts to Keep Your Appliances Running Smoothly

- Preventative Alerts help you stay a step ahead of potential issues to find proactive solutions before problems arise.
- Avoid preventable repairs and service calls with real-time diagnostics for a hassle-free experience.
- Integrated within LG's ThinQ app—a smart home hub for managing your smart devices and appliances.

PRODUCT FEATURES

SUMMARY	
Type	Electric Single Oven
Total Oven Capacity (cu. ft.)	6.3
Available Colors	Stainless Steel
COOKTOP	
Type	Radiant
No of Radiant Elements	4
Element Size/ Wattage - Left Rear	1200W (6")
Element Size/ Wattage - Right Rear	1200W (6")
Element Size/ Wattage - Left Front	3200W (9") / 1400W (6") (UltraHeat™)
Element Size/ Wattage - Right Front	3200W (9") / 1400W (6") (UltraHeat™)
Center (Warming Zone)	-
Hot Surface LED Indicator	Yes
OVEN FEATURES	
Broil Element (Watt)	Sheath (4200W/ 6 Pass)
Convection (Watt)	2500W
Convection Fan	Dual Speed (High/Low)
Convection Type	Fan Convection
Oven Mode	Bake, Broil, Air Fry, EasyClean®, Convection Bake, Convection Roast, Warm
Oven Control Features	Keypad
Convection Conversion	Yes
EasyClean®	Yes
EasyClean® Time	10 mins
GoCook Smart Oven Light	1 Light
No. of Rack Positions	-
Door Lock	No
Automatic Safety Shut Down	After 12 Hours
InstaView	No

DRAWER FEATURES	
Type	Storage
Time Control	No
CONTROL FEATURES	
Cooktop Control Type	Knobs Control
Oven Control Type	Keypad
Display	White LED
Language	English
Clock	12hr or 24hr (Option)
Kitchen Timer	Yes
Timed Cook	Yes
Temperature Unit of Measure	Fahrenheit / Celsius
Cooking Complete Reminder Volume	Beeper (Hi, Lo, Off)
Certified Sabbath Mode	Yes
ThinQ® SMART FEATURES	
ThinQ® (Wi-Fi Enabled)	Yes
ThinQ Up	Yes
Check & Control	Yes
Voice Control	Google Assistant & Amazon Alexa
Proactive Customer Care	Yes
SmartDiagnosis™	Yes
APPEARANCE	
All Available Color	Stainless Steel
Backguard Color	Black
Knobs	NI-CR Plated (Weight)
Knobs Material	Aluminum/ PC+ABS
Handle	AI Anodizing
Handle Material	Stainless Steel
Handle Type	Bar Type
PrintProof™ Finish	No
Oven Door Feature	WideView™ Window (Clear Glass)
Cooktop Finish	Stainless Steel

ACCESSORIES	
Standard Rack	Yes (2)
Air Fry Basket	No
POWER/ RATINGS	
Amp Rating at 208V	47.1 A
Amp Rating at 240V	54.3 A
KW Rating at 208V	9.8kW
KW Rating at 240V	13W
Required Power Supply (amp)	40A
DIMENSIONS/ CLEARANCES/ WEIGHT	
Shipping Weight	193.3 lbs
Product Weight	160.9 lbs
Cabinet Width	30"
Overall Depth - without handle	26 3/4"
Overall Depth - with handle	29 1/8
Overall Height	46 1/2"
Overall Width	29 7/8
Oven Interior Dimensions (W x H x D)	24 7/8" x 22" x 20"
Height to Cooking Surface	36"
Drawer Dimensions (W x H x D)	22 3/8 " x 4" x 14 11/16"
Carton Dimensions (W x H x D)	32 1/2" x 51" x 30 1/2"
LIMITED WARRANTY	
Parts & Labor	1 Year
UPC CODE	
LREN6321VE	048231351249

© 2025 LG Electronics USA, Inc. All rights reserved. "LG Life's Good" is a registered trademark of LG Corp. All other product and brand names are trademarks or registered trademarks of their respective owners. Design, features and specifications are subject to change without notice. Non-metric weights and measurements are approximate. Some features may require Internet access. Content and services may vary by product and are subject to change without notice. 9/25/26

LREN6321VE

DIMENSION / CLEARANCES

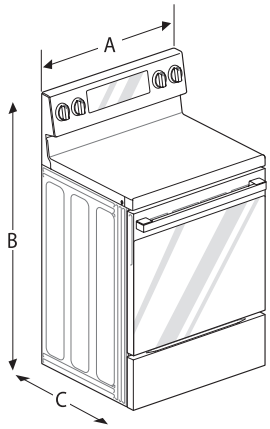

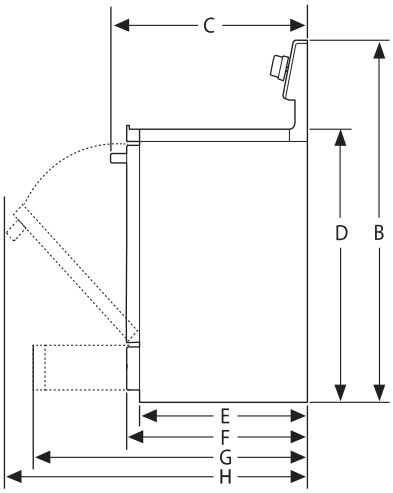

DIMENSIONS		
A	Width	29 7/8" (759 mm)
B	Height	46 1/2" (1,181 mm)
C	Depth (Includes Door Handle)	29 1/8" (740mm)
D	Height (Excludes Controller)	36" (914 mm)
E	Depth (Includes only the product body that is loaded into the cabinet. Excludes door, drawer, and handles)	24 5/8" (627 mm)
F	Depth (Excludes Door Handle)	26 3/4" (680 mm)
G	Depth when drawer is fully opened	36 13/16" (935mm)
H	Depth when door is fully opened	49 13/16" (1,265 mm)

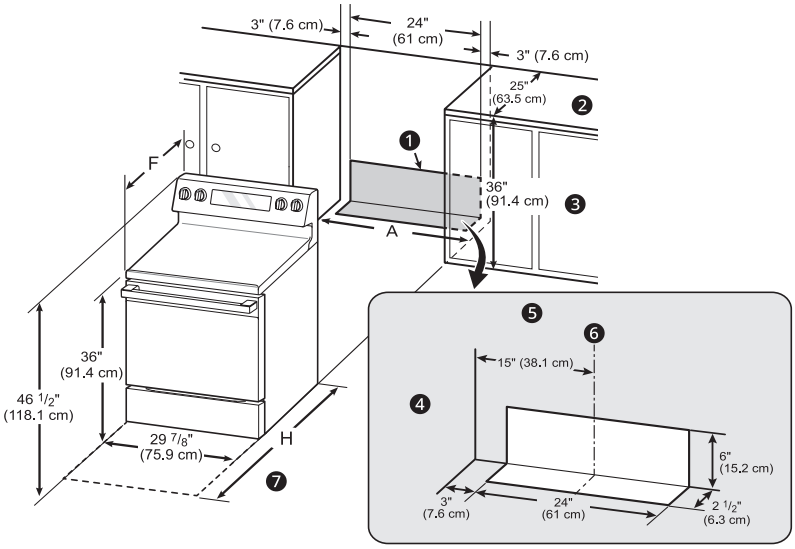

MINIMUM DIMENSIONS		
1	Minimum distance from top of range to combustible surface overhead	30" (76.2 cm)
2	Minimum clearance to left/right wall	5" (12.7 cm)
3	Maximum depth for cabinets above countertops	13" (33.0 cm)
4	Front edge of the range side panel forward from cabinet	2 1/4" (6.3 cm)
5	To cabinets below cooktop and at the range back)	0"
6	Minimum opening in overhead cabinets	30" (76.2 cm)
7	Minimum distance from countertop to overhead cabinets at side	15" (38.1 cm)
8	Height of countertop	36" (91.4 cm)

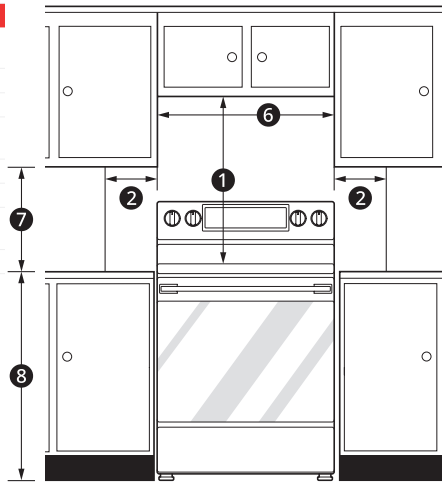

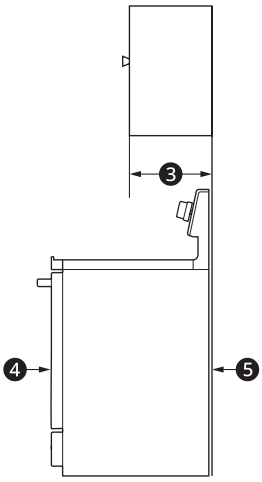

NOTE

- 1 30" (76.2 cm) minimum clearance between the top of the cooking surface and the bottom of an unprotected wood or metal cabinet; or 24" (60.9 cm) minimum when bottom of wood or metal cabinet is protected by not less than 1/4" (0.64 cm) flame retardant millboard covered with not less than no. 28MSG sheet steel, 0.015" (0.381 mm) stainless steel, 0.024" (0.610 mm) aluminum or 0.020" (0.508 mm) copper.
- 7 15" (38.1 cm) minimum between countertop and adjacent cabinet bottom.
- Important – Save for the use of the local electrical inspector.
- For installation in Canada, a free-standing range is not to be installed closer than 15/32" (12 mm) from any adjacent surface.

© 2025 LG Electronics USA, Inc. All rights reserved. "LG Life's Good" is a registered trademark of LG Corp. All other product and brand names are trademarks or registered trademarks of their respective owners. Design, features and specifications are subject to change without notice. Non-metric weights and measurements are approximate. Some features may require Internet access. Content and services may vary by product and are subject to change without notice. 1/27/26