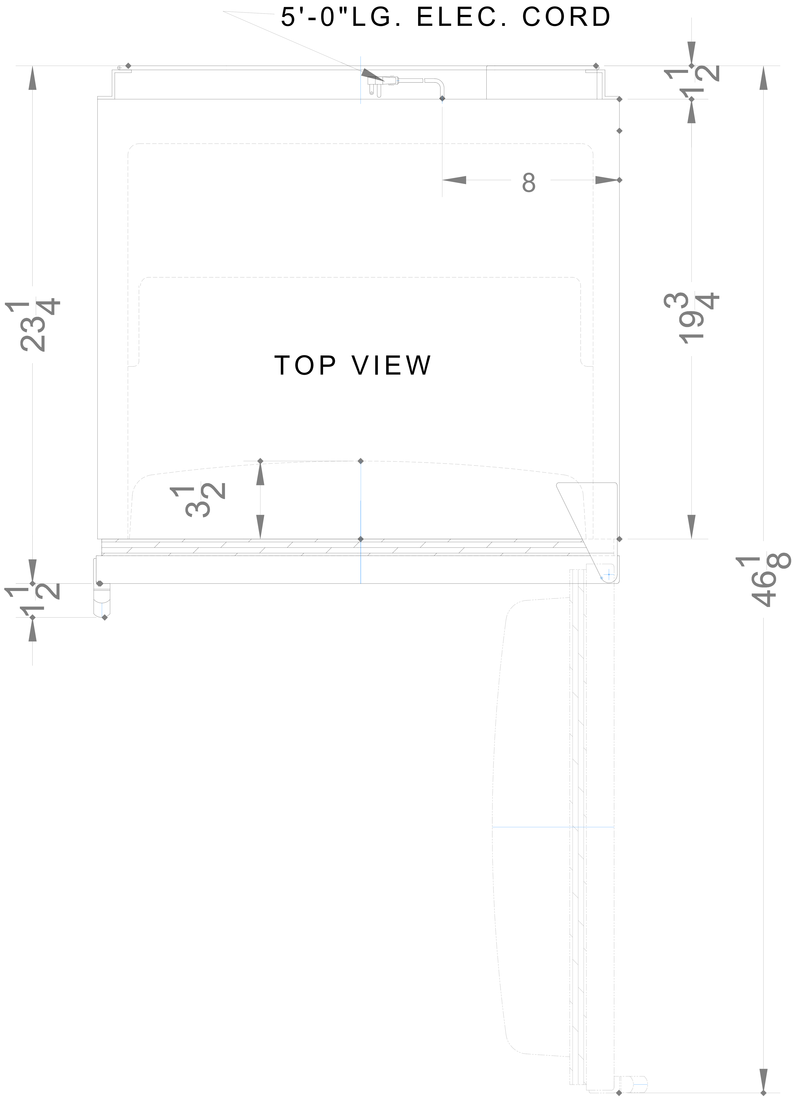
5'-0"LG. ELEC. CORD
8
TOP VIEW
23 1/4
19 3/4
3 1/32
1 1/2
1 1/2
46 1/8

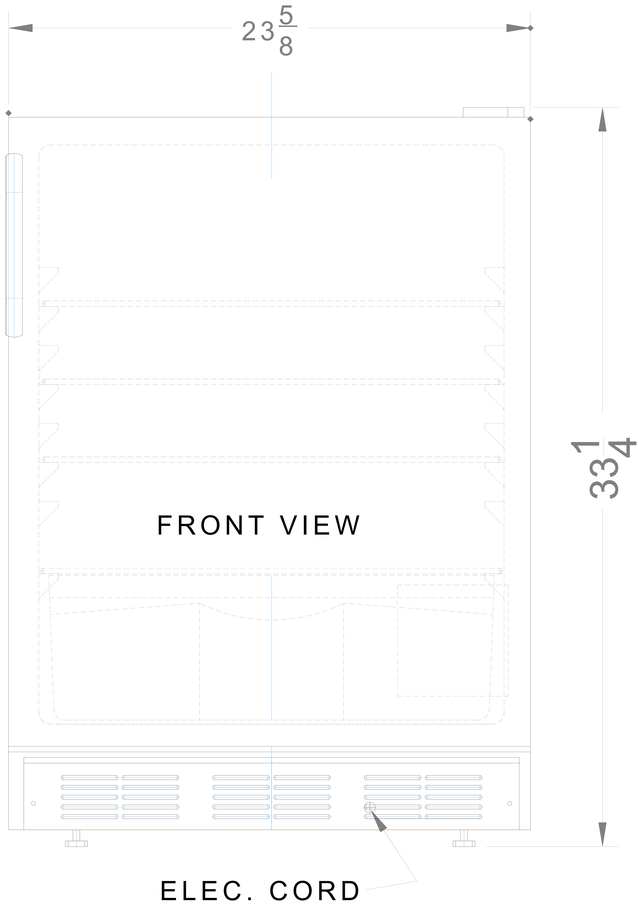
23 5/8
FRONT VIEW
33 1/4
ELEC. CORD

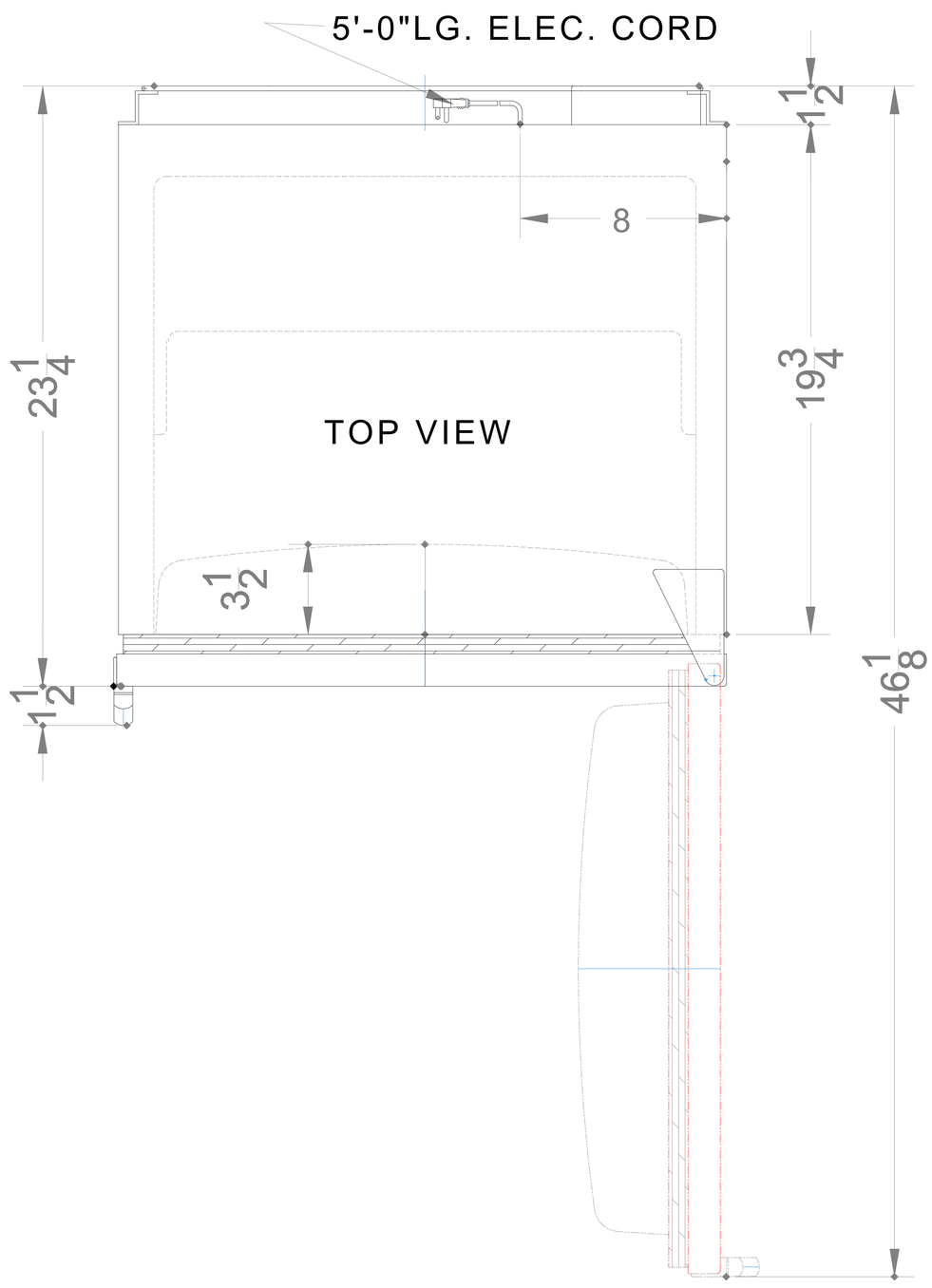

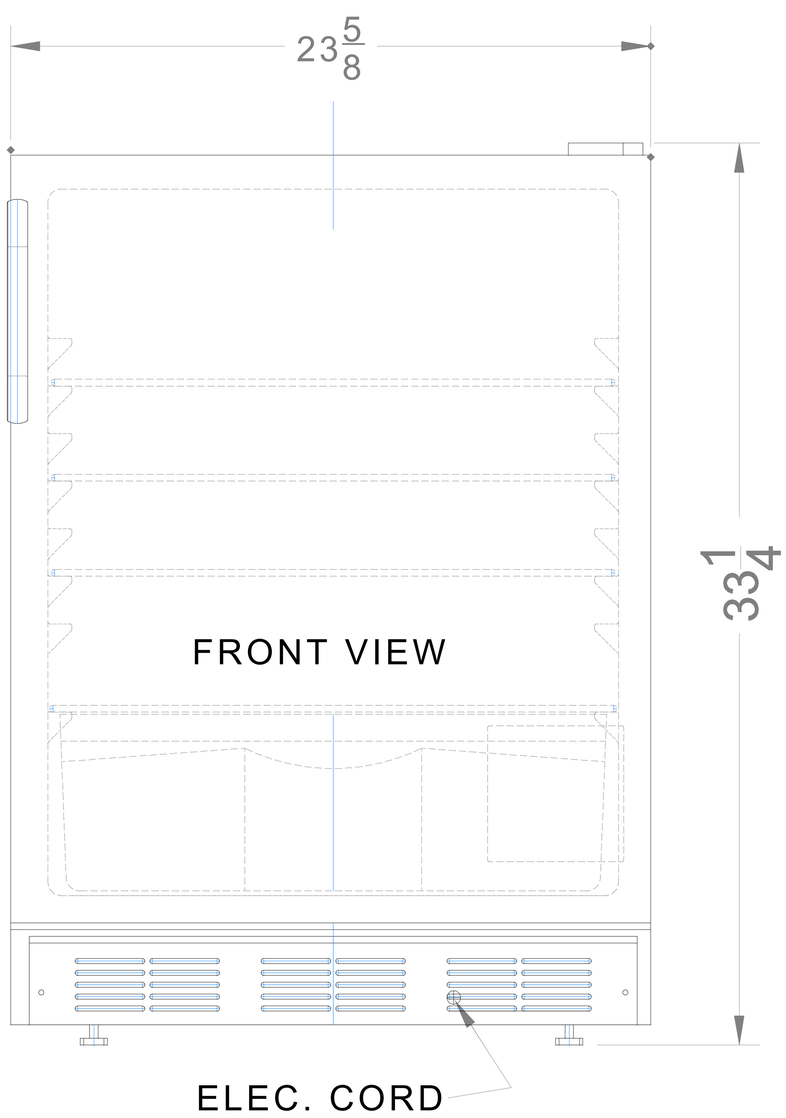

MODEL NO. FF6B

TYPE:
REFRIGERATOR

SUMMIT
SPECIALTY MAJOR APPLIANCES

FELIX STORCH INC
www.summitappliance.com
(718) 893-3900

SCALE: 1 1/4" = 1'-0"
DATE: JUNE/13/11

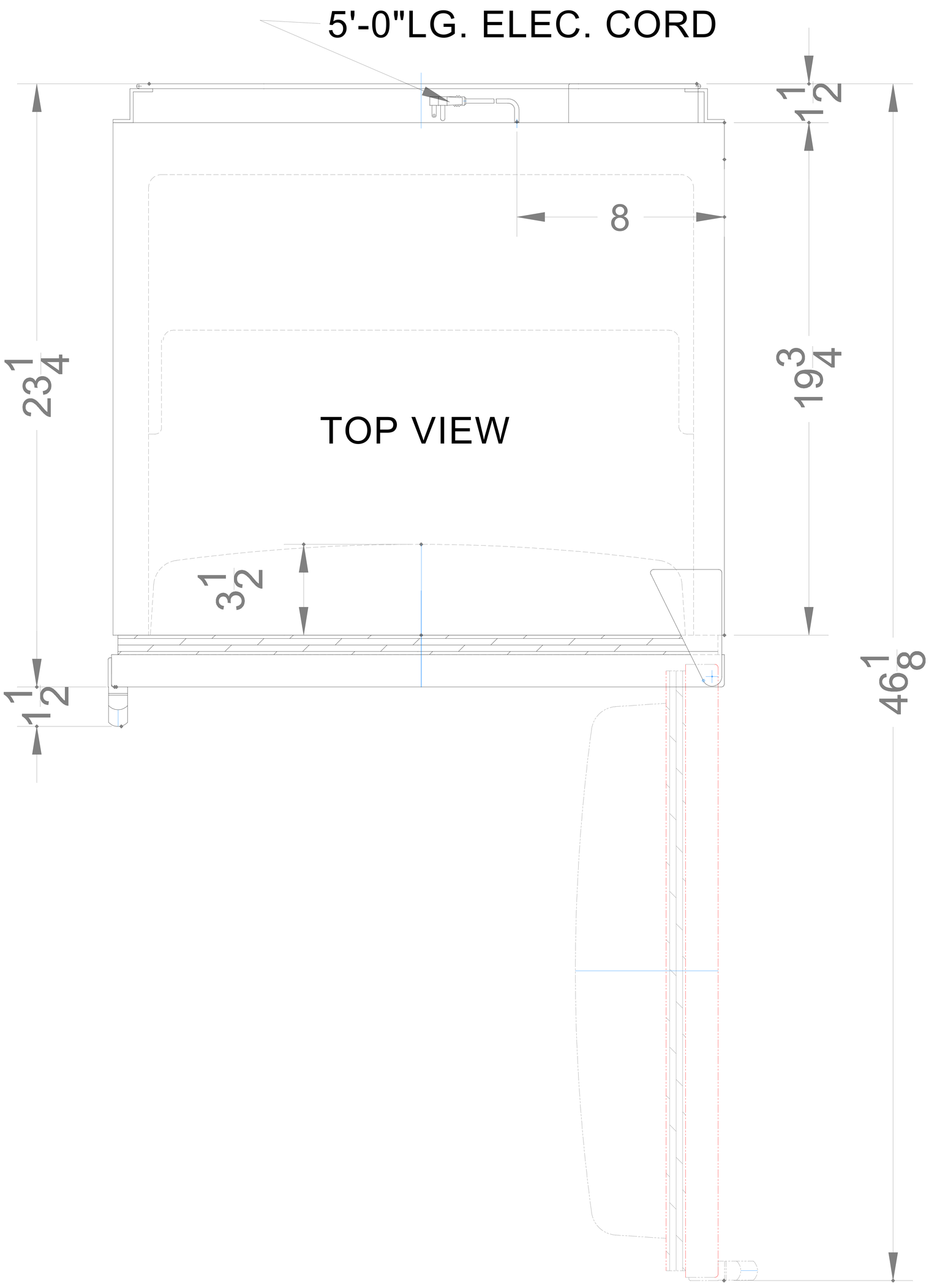
5'-0"LG. ELEC. CORD
TOP VIEW
8
23 1/4
1 1/2
1 1/2
3 1/2
19 3/4
46 1/8

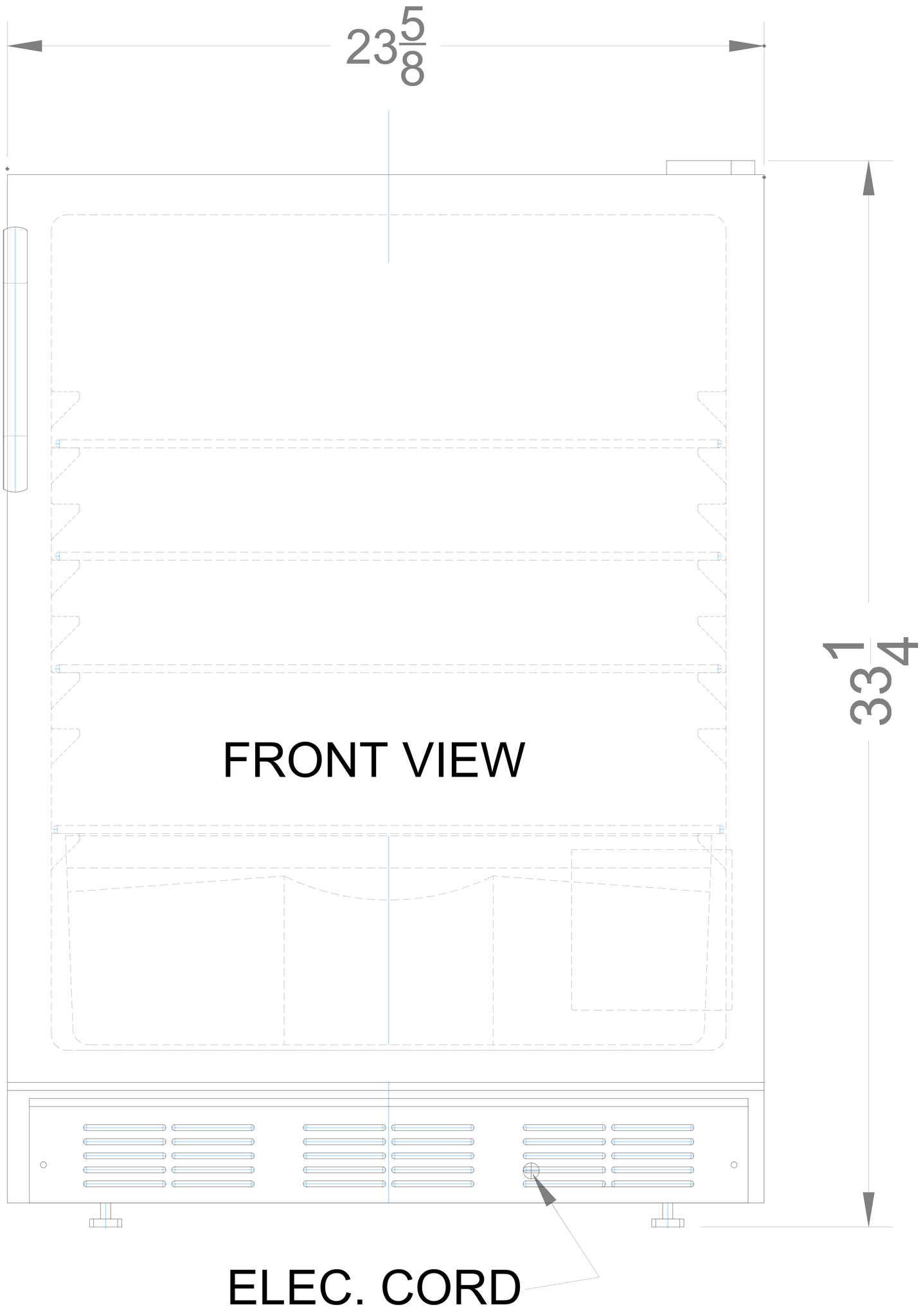
23 5/8
33 1/4
FRONT VIEW
ELEC. CORD