THREE DRAWER
CHEST

LIFE DOESN'T COME WITH INSTRUCTIONS
BUT THIS DOES

Place Serial # Here
Lugar número # aquí
Part # 10028209
(10/20/21)

Signature DESIGN BY ASHLEY

BUILT FOR Home

WARNING

Children have died from furniture tip over. To reduce the risk of furniture tipover:

- ALWAYS install tip over restraint provided.
- NEVER put a TV on the product.
- NEVER allow children to stand, climb, or hang on drawers, doors or shelves
- NEVER open more than one drawer at a time.
- Place heaviest items in the lowest drawers.

ADVERTENCIA

Se han producido muertes infantiles producto del valcado de muebles. Para reducir el riesgo de volcado de muebles:

- Instale SIEMPRE el sistema de fijación antivolcado.
- NUNCA coloque televisores sobre este producto.
- NUNCA permita que los niños se paren, trepen o cuelguen de cajones, puertas o estanterías
- NUNCA abra más de un cajón al mismo tiempo.
- Coloque los artículos más pesados en los cajones inferiores.

ATTENTION

Le basculement d'un meuble peut blesser vos enfants, voire entraîner leur mort. Pour réduire ce risque:

- Installez TOUJOURS le dispositif de retenue fourni.
- N'installez JAMAIS un téléviseur sur ce produit.
- Ne permettez JAMAIS à vos enfants de monter sur les tiroirs, portes ou éstagères, d'y grimper ou de s'y accrocher.
- N'ouvrez JAMAIS plus d'un tiroir à la fois.
- Rangez les objets le plus lourds dans les tiroirs du bas.

VERIFIED

Product Stability (50 lbs.)

Program Endorsed by American Home Furnishings Alliance

UL VERIFIED Verify.UL.com B993140

WE CARE ABOUT YOUR SAFETY PLEASE READ

IMPORTANT SAFETY NOTICE
READ CAREFULLY BEFORE BEGINNING ASSEMBLY

- This unit contains small parts that present a choking hazard for children under 3 years of age. These parts are for adult assembly only and should be permanently affixed to the furniture. Any unused parts should be discarded properly.
- To make the assembly process easier, ask a friend to help you. ***2 people required***
- Always use proper tools.
- Carefully review the parts and hardware list.
- It is recommended that you assemble the unit on a protected surface or carpeted floor to avoid scratches.
- Follow assembly step in order. DO NOT SKIP ANY STEPS.
- Periodically check to ensure that all connectors (bolts,screws, etc.) are tight.
- Keep the instructions for future reference.

Ashley Furniture Industries, LLC disclaims any liability for damages or injuries which may occur due to failure to properly follow assembly instructions, properly assemble the product, or properly use the product.

AVISO IMPORTANTE DE SEGURIDAD
LEA CUIDADOSAMENTE ANTES DE COMENZAR A ARMAR

- Esta unidad contiene piezas pequeñas que presentan un peligro de asfixia para los niños menores de 3 años de edad. Estas piezas son para montaje por un adulto solamente y deben colocarse permanentemente a los muebles. Las partes no utilizadas deben desecharse correctamente.
- Para facilitar el proceso de ensamblaje, pedirle a un amigo que te ayude. ***2 personas requeridas***
- Siempre use las herramientas adecuadas.
- Revisar cuidadosamente las piezas y lista de hardware.
- Le recomendamos que montar la unidad sobre una superficie protegida o moqueta para evitar arañazos.
- Siga los pasos de montaje en orden. NO SE SALTE LOS PASOS.
- Revise periódicamente para asegurarse de que todos los conectores (pernos, tornillos, etc.) están bien apretados.
- Guarde las instrucciones para referencia futura.

Ashley Furniture Industries, LLC se exime de cualquier responsabilidad por daños o lesiones que pueden ocurrir debido a que no correctamente sigan las instrucciones de montaje, montan correctamente el producto o usan correctamente el producto.

AVIS DE SÉCURITÉ IMPORTANT
LIRE ATTENTIVEMENT AVANT DE COMMENCER LE MONTAGE

- Cet appareil contient de petites pièces qui présentent un risque d'étouffement pour les enfants âgés de moins de 3 ans. Ces pièces sont pour l'assemblage par un adulte seulement et doivent être apposées de façon permanente aux meubles. Toute pièce inutilisée devrait être éliminé correctement
- Pour faciliter le processus d'assemblage, demandez à un ami pour vous aider. ***2 personnes nécessaires***
- Toujours utiliser des outils appropriés.
- Lire attentivement les pièces et la liste du matériel.
- Nous recommandons que vous montez l'appareil sur une surface protégée ou de moquette pour éviter les rayures.
- Suivez les étapes de montage dan l'odrde. NE SAUTEZ PAS LES ÉTAPES.
- Vérifier périodiquement pou s'assurer que tous les connecteurs (boulons,
- vis, etc.) sont bien serrés.
- Conserver les instructions pour toute consultation ultérieure.

Ashley Furniture Industries, LLC décline toute responsabilité pour les dommages ou blessures pouvant survenir en raison de l'omission de bien suivent les instructions d'assemblage, assemblent corrctement le produit ou utilisent correctement le prouit.

BELANGRIJKE VEILIGHEIDS AANKONDIGING AANDACHTIG TE LEZEN ALVORENS BEGIN VERGADERING

- Dit apparaat bevat kleine onderdelen die gevaar voor verstikking opleveren voor kinderen jonger dan 3 jaar. Deze onderdelen zijn voor volwassen vergadering alleen en moeten permanent op de meubels worden aangebracht. Alle ongebruikte delen moeten naar behoren worden weggegooid.
- Om de assemblage proces gemakkelijker maken, vraag een vriend om u te helpen. ***2 personen vereist***
- Gebruik altijd juiste hulpmiddelen.
- Controleer zorgvuldig de onderdelen en de harwarelijst.
- Het is raadzaam dat u de eenheid op een beschermde oppervlakte of beklede vloer samenstellen te voorkomen krassen.
- Assemblage stappen in volgorde. NIET ALLE STAPPEN OVERSLAAN.
- Regelmatig controleren om ervoor te zorgen dat alle connectors (bouten, schroeven, enz.) strak zijn.
- Bewaar de instructies voor toekomstig gebruik.

Ashley Furniture Industries, LLC aanvaardt geen aansprakelijkheid voor schade of verwondingen die zich te wijten aan niet goed voordoen kunnen volgen montage-instructies, het product goed te monteren of correct gebruik van het product.

WE WANT YOUR FURNITURE TO LAST PLEASE READ

CARE AND CLEANING INSTRUCTIONS

Congratulations on the purchase of your new product. Proper care and cleaning will extend the life of your purchase. To ensure your product maintains its finish and quality:

- Use a soft, clean cloth that will not scratch the surface when dusting
- Clean only with a slightly damp cloth
- Do not use chemical based products or solvents
- Liquid spills should be removed immediately
- Direct sunlight may fade or alter color of wood finishes

CUIDADO Y LIMPIEZA

Felicidades por la compra de su nuevo producto. El cuidado apropiado y la limpieza prolongar la vida de su compra. Para asegurar que el producto mantiene su calidad y acabado:

- Utilice un paño suave que no se reyará la superficie cuando el polvo
- Limpie sólo con un paño ligeramente humedecido
- ¿No use químicos basado en productos o disolventes
- Los derrames de líquidos deben eliminarse inmediatamente
- La luz solar directa puede desaparecer o alterar color de revestimientos de madera

INSTRUCTIONS DE NETTOYAGE ET DE SOINS

Toutes nos félicitations pour l'achat de votre nouveau produit. Bon entretien et un nettoyage prolonger la vie de votre achat. Pour vous assurer que votre produit maintient sa finition et sa qualité:

- Utilisez un chiffon doux et propre qui n'égratigne pas la surface lorsque l'epoussetage
- Nettoyer uniquement avec un chiffon légèrement humide
- Ne pas utiliser chimique basé de produits ou de solvants
- Déversements de liquides doivent être retirés immédiatement
- Lumiére directe du soleil peut s'estomper ou modifier la couleur de la finition en bois

CUIDADO Y LIMPIEZA

Gefeliciteerd met de aankoop van uw nieuwe product. Juiste zorg en schoonmaak zal verlengen de levensduur van uw aankoop. Om ervoor te zorgen dat uw product handhaaft zijn afwerking en kwaliteit:

- Gebruik een zachte, schone doek dat geen op het oppervlak krassen zal wanneer afstoffen
- Alleen met een licht vochtige doek schoonmaken
- Doen niet gebruik chemische gebaseerd producten of oplosmiddelen
- Gemorste vloeistof moeten onmiddellijk worden verwijderd
- Direct zonlicht kan vervagen of veranderen van kleur van hout afwerkingen

WE'RE HERE IF YOU NEED IT CONTACT US

CUSTOMER SERVICE

To order replacement parts, or if you have any difficulty assembling this unit refer to the front page of this manual for model and serial # information along with finding the needed part number(s) from the parts list. Then call our customer service line. Please do not return and parts to the store.

SERVICE À LA CLIENTÈLE

Pour commander des pièces de remplacement, ou si vous avez des difficultés à assembler les pièces voir la première page de ce manuel pour les informations de modèle et numéro de série ainsi que de trouver le numéro de partie nécessaire de la liste de piéces. Alors appelez notre service client. Priére de ne pas retourner toutes les piéces au magasin.

SERVICIO AL CLIENTE

Para pedir piezas de repuesto, o si tienes alguna dificultad para ensamblar esta unidad refiérase a la portada de este manual para el modelo y # serial información junto a encontrar los números de parte necesaria de la lista de piezas. Luego llame a nuestra línea de servicio al cliente. Por favor, no devuelva las piezas a la tienda.

KLANTENSERVICE

Te volgorde vervangende onderdelen, of als u problemen heeft dit apparaat te monteren verwijzen naar de voorpagina van deze handleiding voor model en seriële # informatie samen met het vinden van het benodigde deel nummer uit de onderdelenlijst met. Roep vervolgens onze klantenservice lijn. Ga niet delen terug naar de winkel.

RTAParts@ashleyfurniture.com

www.ashleyfurniture.parts

1-844-966-0809

HEADS UP

TIME

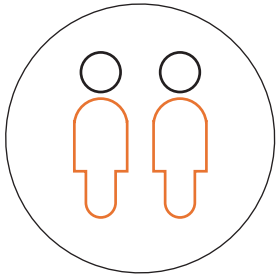

PEOPLE NEEDED

Pro Tip: Choose wisely. Your sanity depends on it.

EFFORT SCALE
(you've got this)

ANTI-TIP KIT

BUST OUT

REQUIRED TOOL

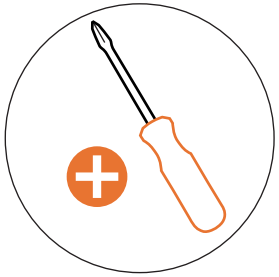

REQUIRED TOOL

1. TOP (1)
2. LEFT SIDE (1)
3. RIGHT SIDE (1)
4. BOTTOM (1)
5. BALLEST PANEL (1)
6. DRAWER FRONT (3)
7. DRAWER LEFT SIDE (3)
8. DRAWER RIGHT SIDE (3)
9. DRAWER BACK (3)
10. DRAWER BOTTOM (3)
11. TOP BALLEST PANEL (1)
12. UNIT BACK (1)

G82 METAL BASE STRETHER (2)

G78 METAL SIDE (2)

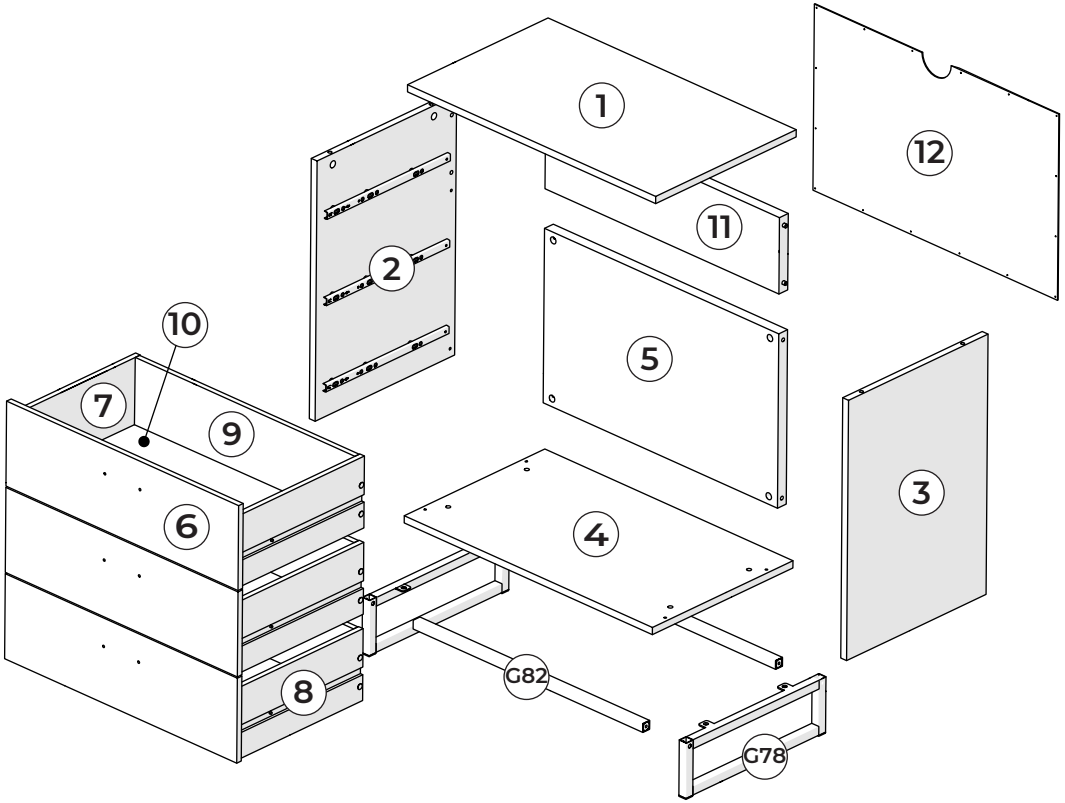

COMPONENTS

HARDWARE

H14 x8

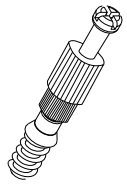

H21 x16

H24 x1

H31 x6

H50 x4

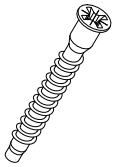

H56 x4

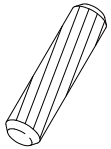

H58 x6

H62 x8

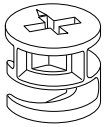

H68 x12

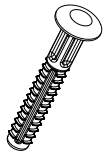

H84 x6

We pre-assembled these to the unit sides for you! You're welcome!

G80 x4

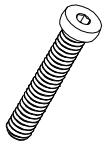

G81 x4

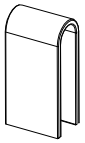

G6 x4

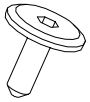

G7 x4

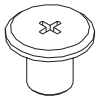

G32 x3

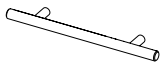

TIP KIT

H30 x1

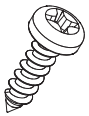

H78 x2

H79 x1

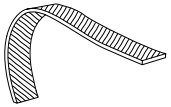

H81 x1

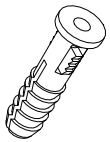

H82 x1

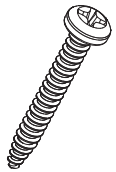

A quick laugh before you get started....
What has four legs but can't walk?
A table.

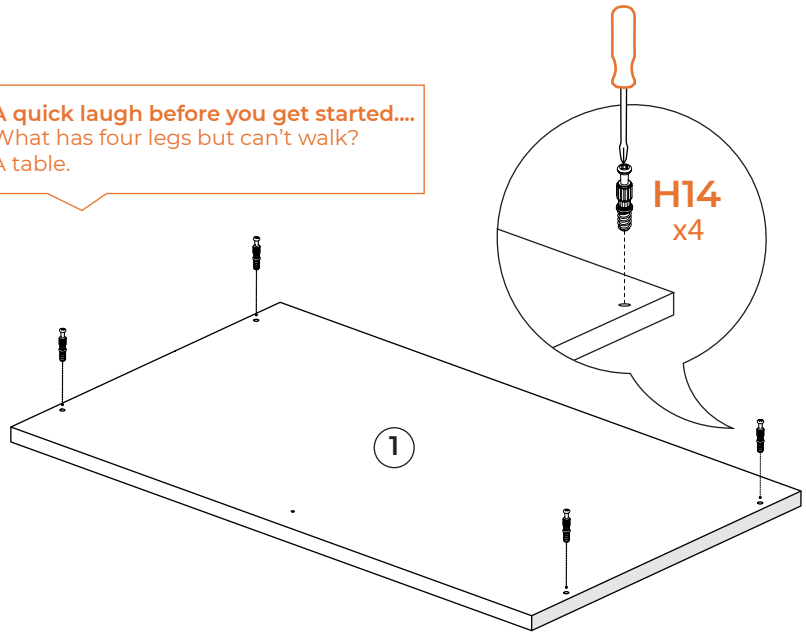

1

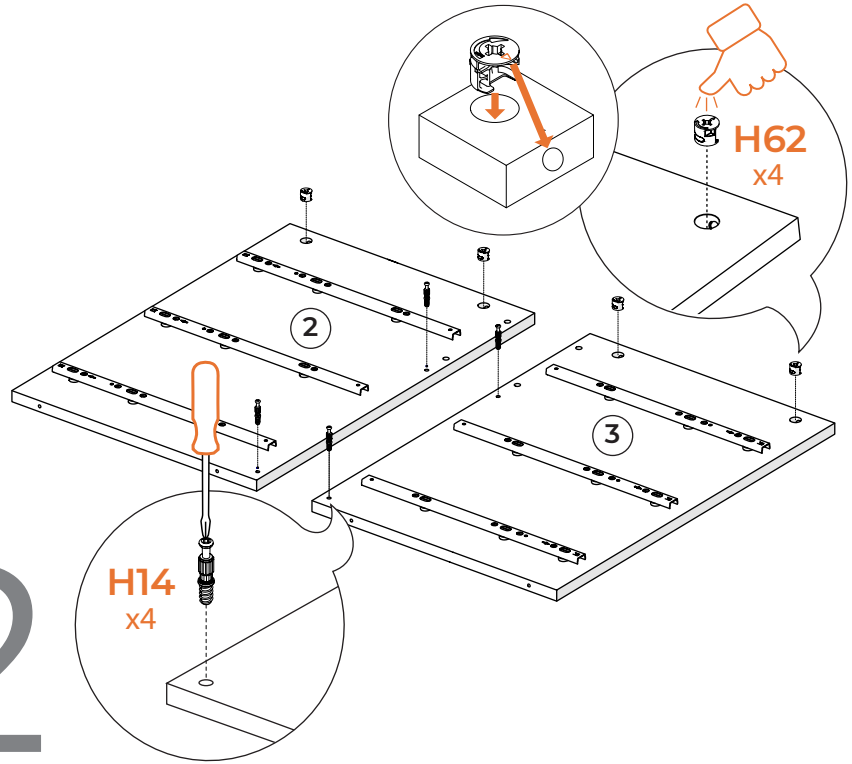

2

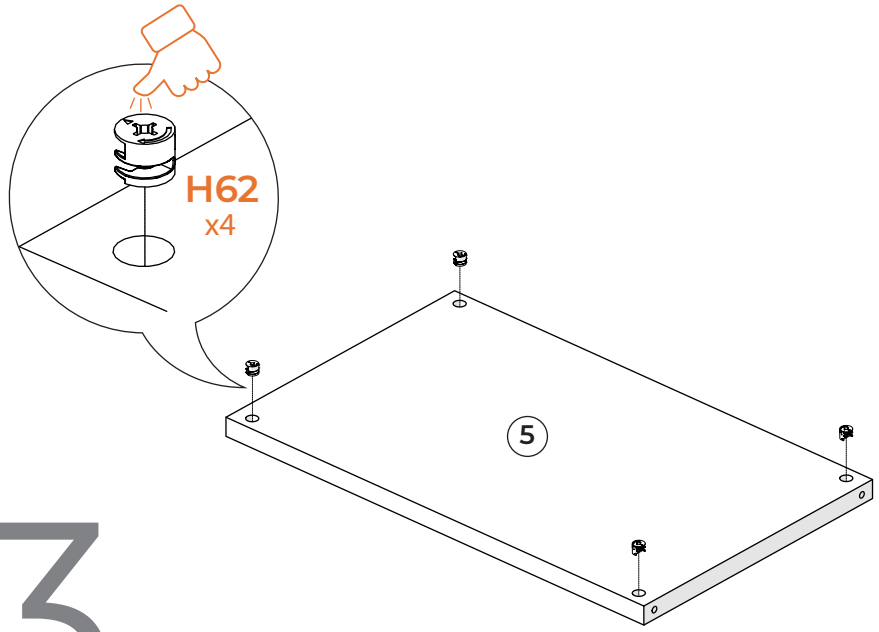

3

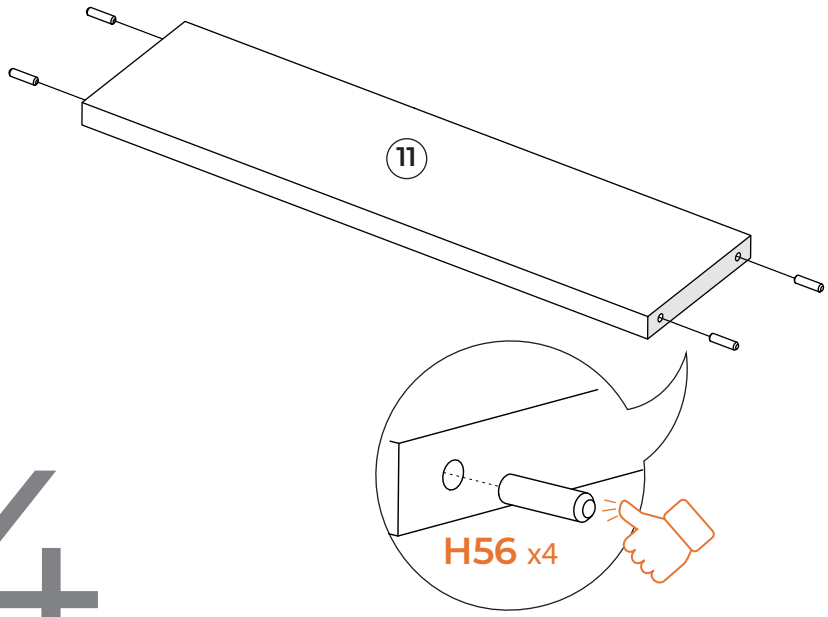

4

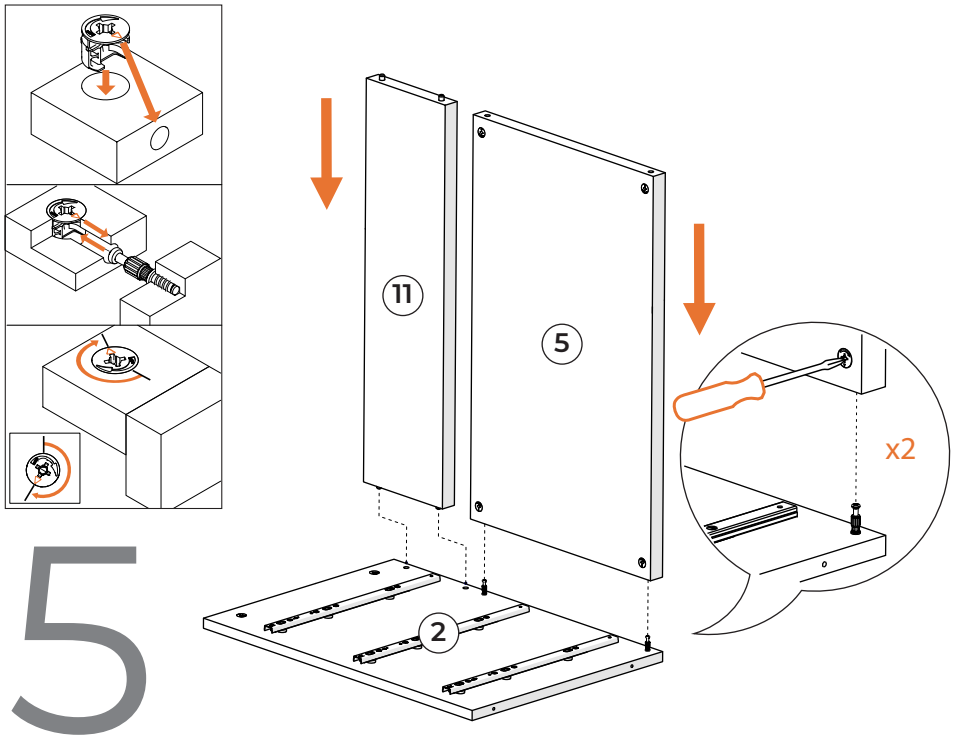
5
11
5
2
x2

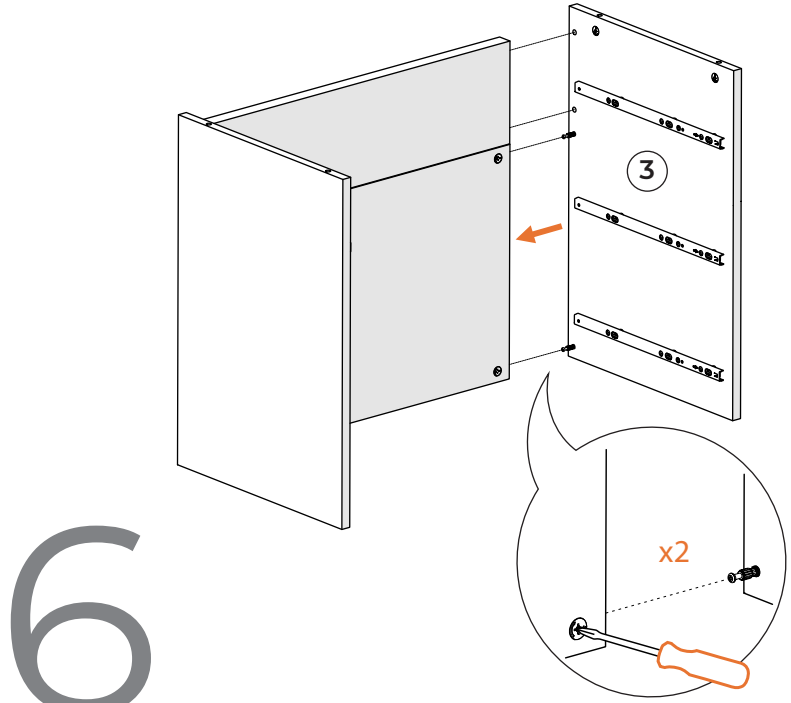
6
3
x2

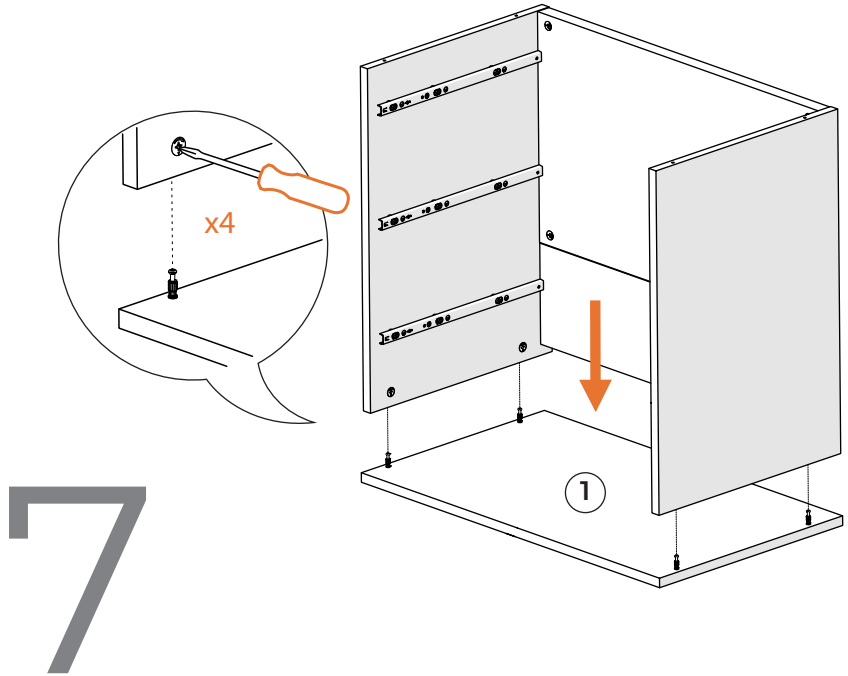
7
x4
1

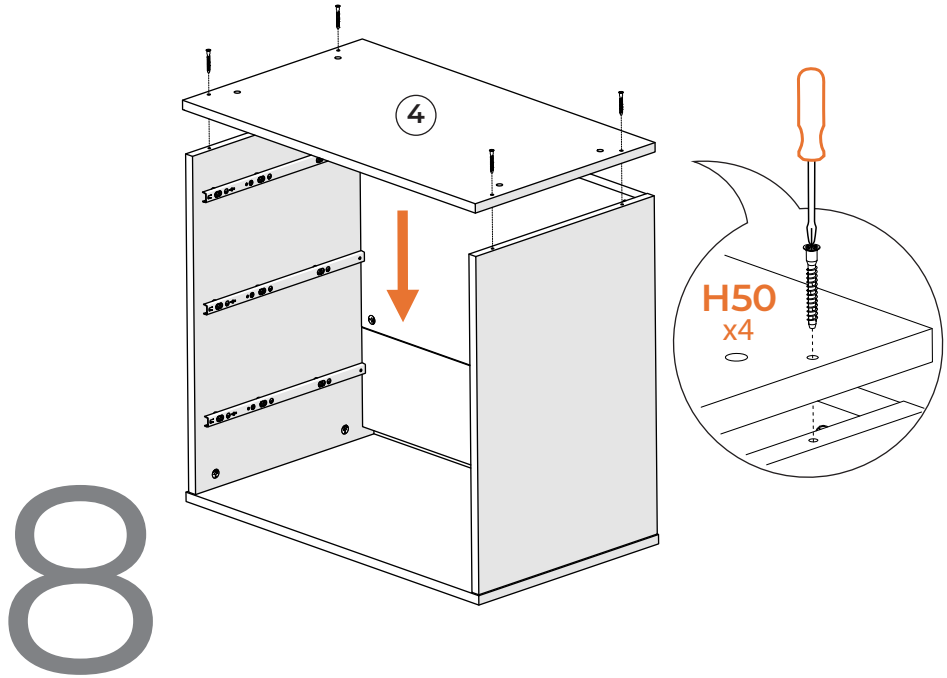
8
4
H50
x4

9

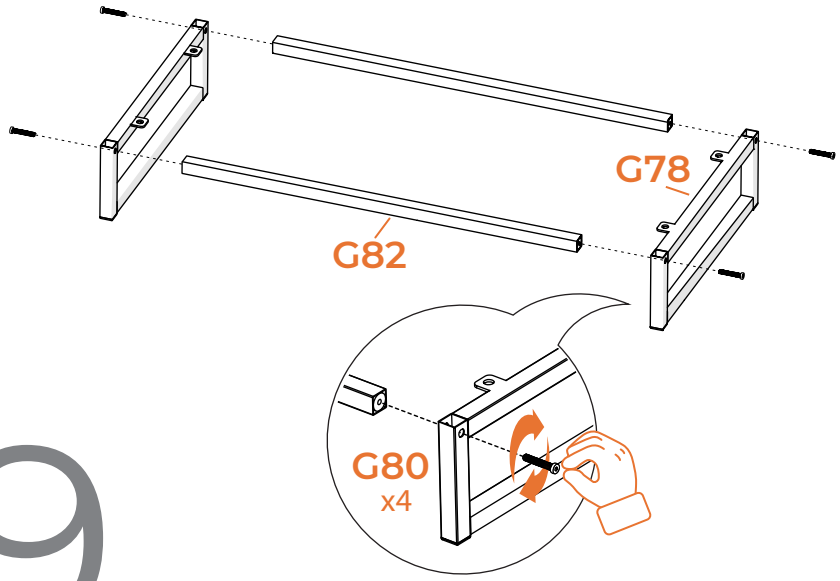
G78
G82
G80
x4

10

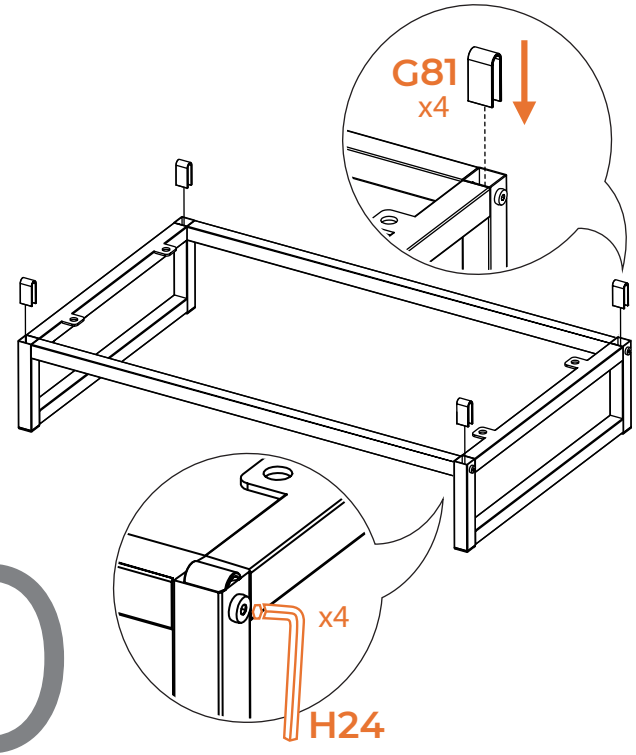
G81
x4
x4
H24

11

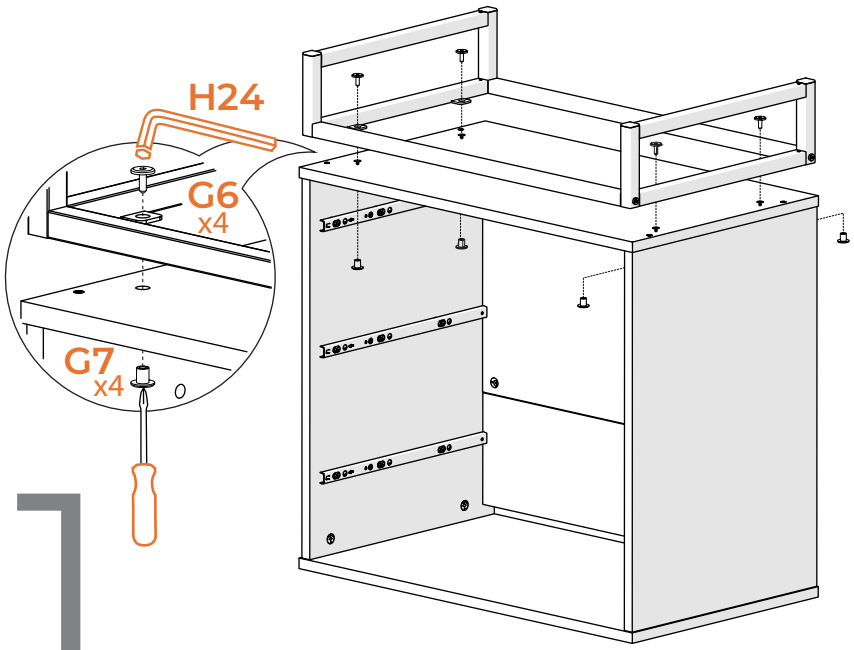
H24
G6
x4
G7
x4

12

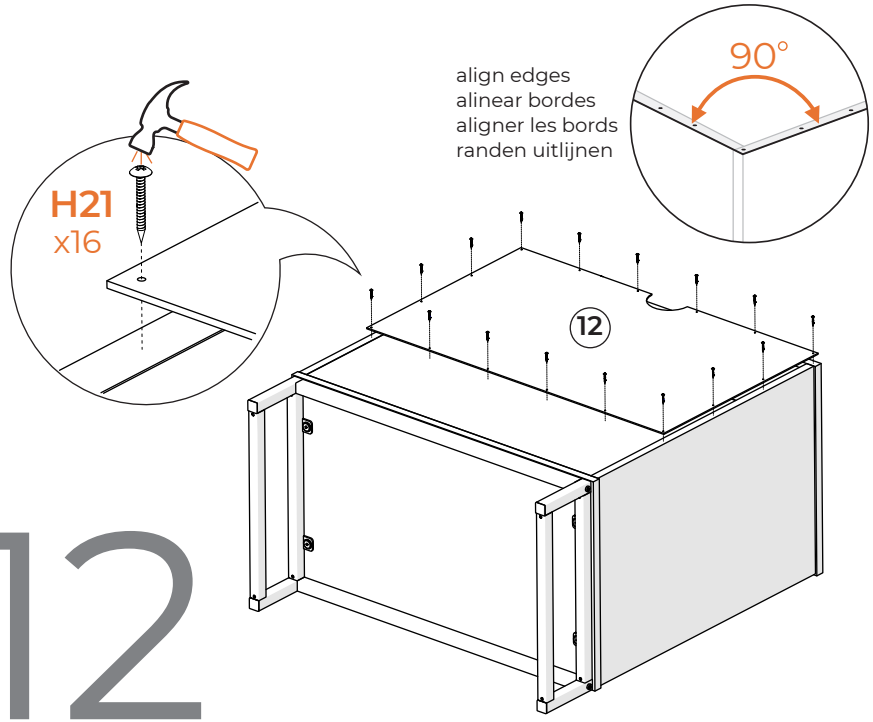
H21
x16
align edges
alinear bordes
aligner les bords
randen uitlijnen
90°
12

ANTI-TIP ANCHORING INSTALLATION

ANTI-TIP KIT

REQUIRED TOOL

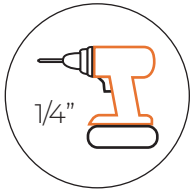

RECOMENDED TOOL

OPTION 1 (with stud)

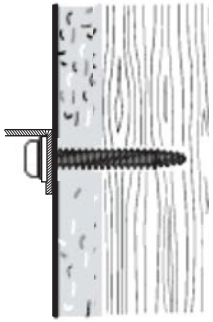

- Located stud in wall. Screw strap (H79) into stud using long screw (H82) & washer (H78)
- Localice la vigra en la pared. Atornille la correa (H79) usando el tornillo largo (H82) y la arandela (H78)
- Visser le panneau mural dans le goujon comme indiqué (H79) (H82) (H78)

OPTION 2 (with wall anchor)

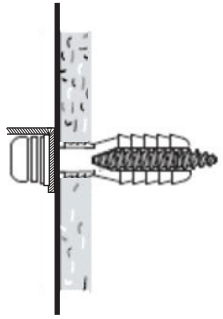

- Drill through wall board using 1/4” drill bit. Insert wall anchor (H81). Screw trap (H79) into wall anchor using long screw (H82) and washer (H78).
- Perfore la pared usando una broca 1/4 de pulgada. Inserte el ancla de pared (H81). Atornille la correa (H79) al ancla de pared usando el tornillo largo (H82) y la arandela (H78)
- Percez le trou 1/4” dans le panneau mural et installez l’ancrage mural. Fixer la vis a l’ancre murale installée comme indiqué (H81) (H79) (H82)

13

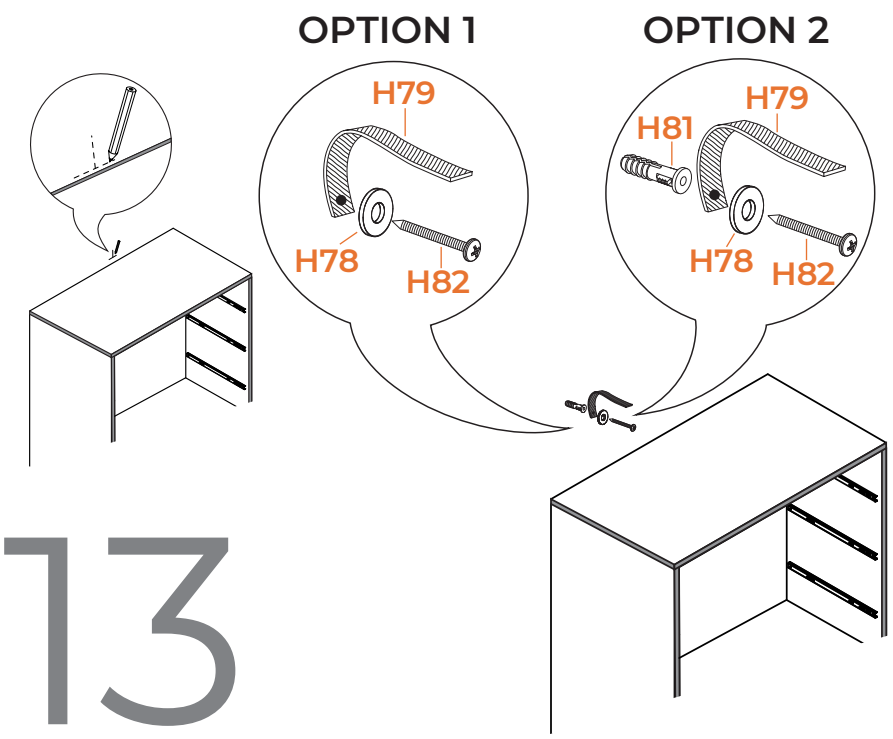

14

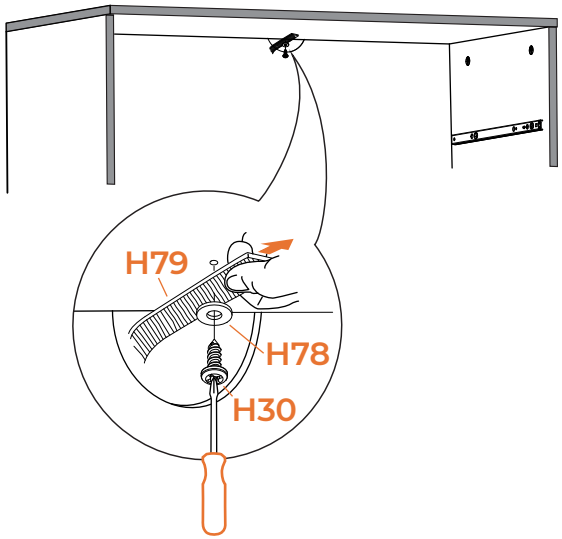

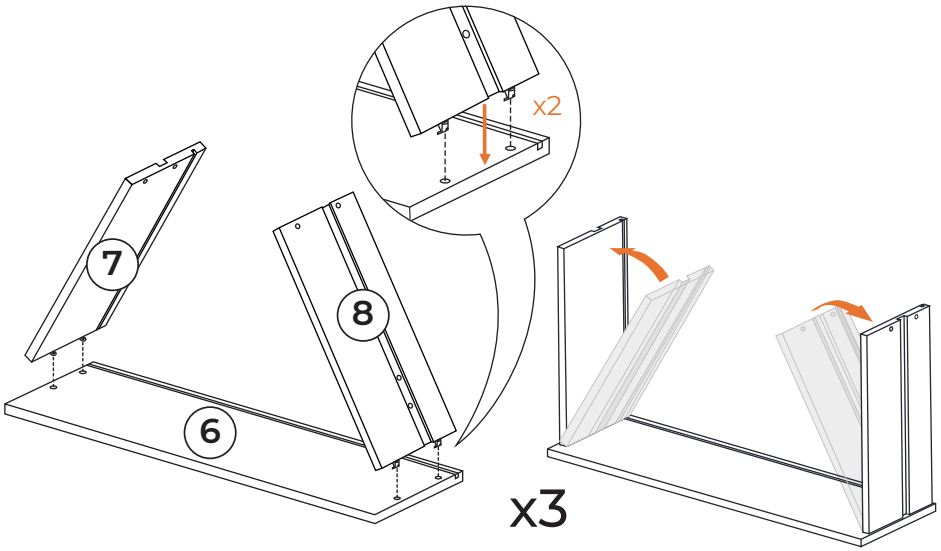

15

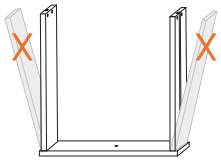

Do Not Overextend, risk of Damage!
No sobreextender, riesgo de daños!
Ne pas prolonger, risque de dommages!
Overbelast niet, risico op schade!

16

Side Step: Getting hangry? Try adding some nachos to this step.

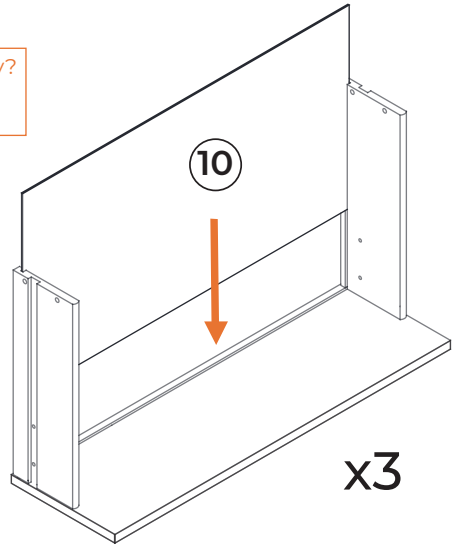

17

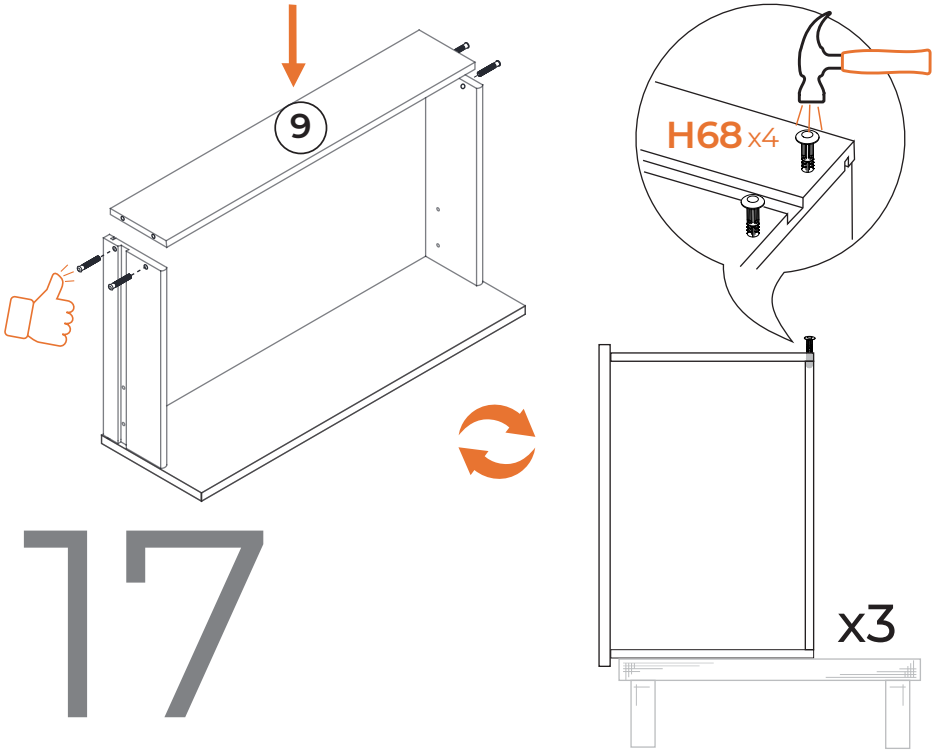

18

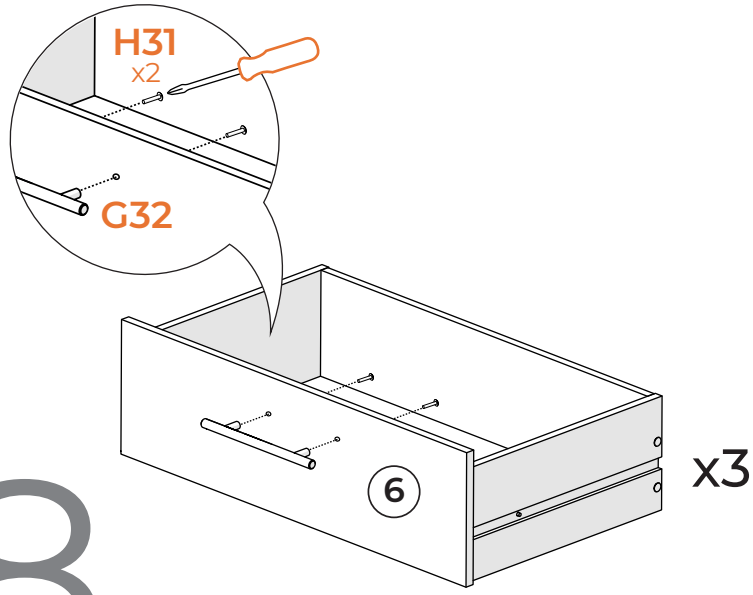

19

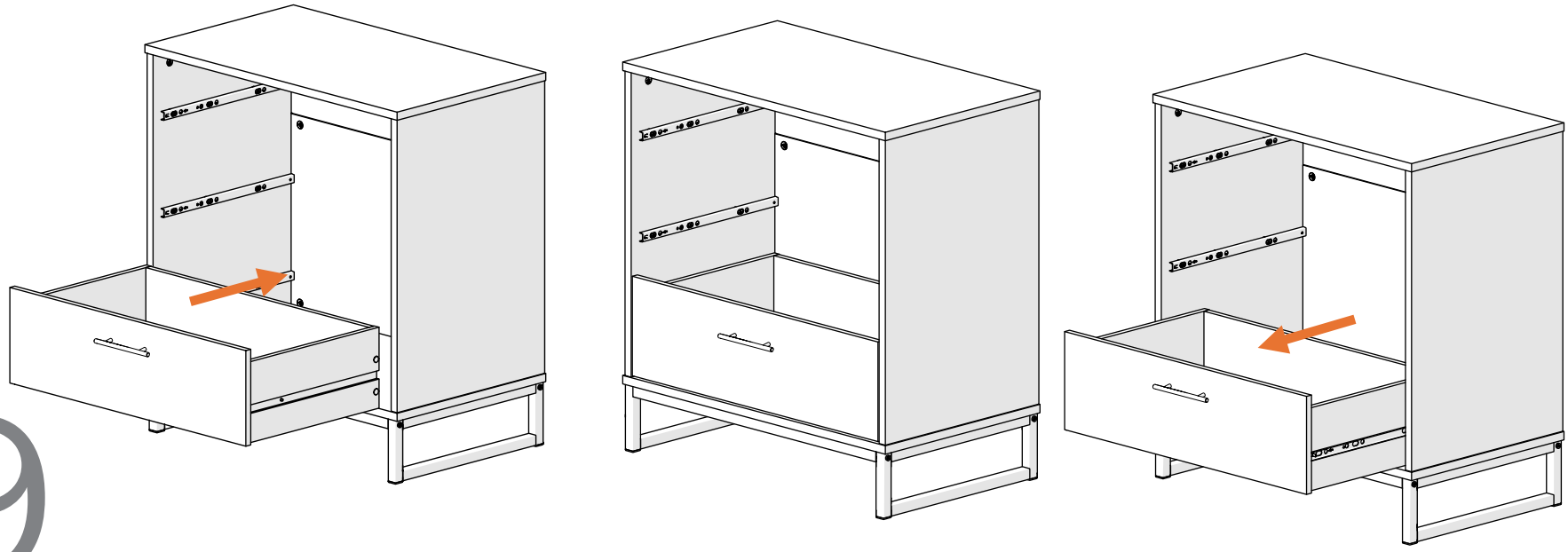

20

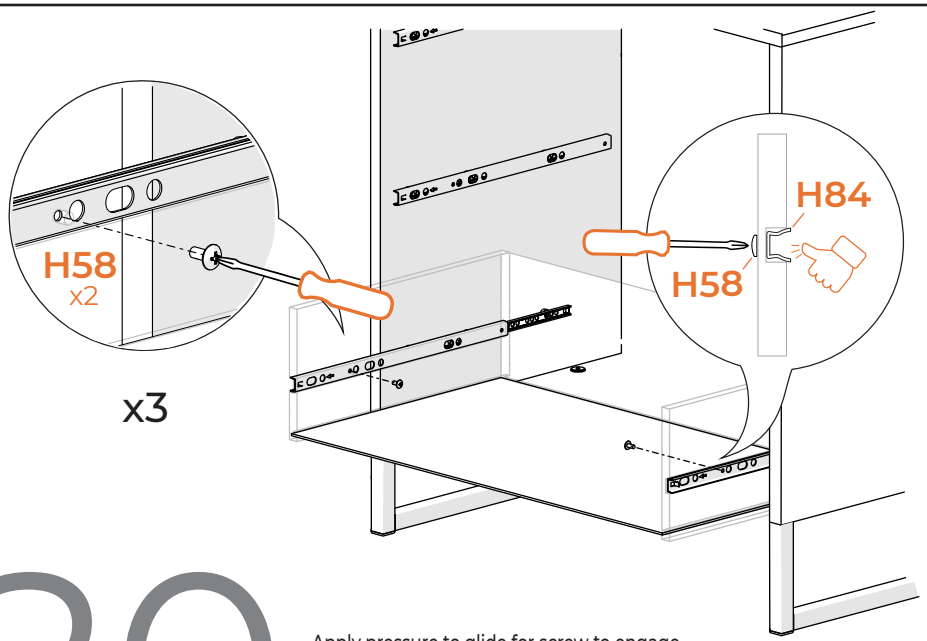

Apply pressure to glide for screw to engage.
Aplique presión para deslizar el tornillo para que encaje.
Appliquez une pression pour glisser pour que la vis s'engage.
Oefen druk uit om te glijden om de schroef vast te zetten.

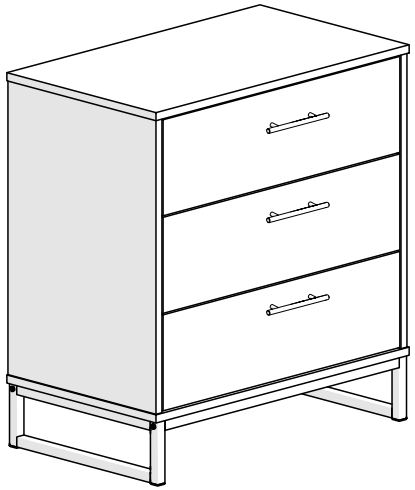

Welcome
TO THE ARTISAN CLUB

Now Get Social With US

Share your **#AshleyFurniture** style
with us **@AshleyHomestore**

ashleyfurniture.com

Warranty Information

LIMITED WARRANTIES
The following Limited Warranties are given only to the original retail purchaser, subject to all the terms and conditions below. These Limited Warranties are non-transferable:

Ashley Furniture Industries, LLC (the "Warrantor"), subject to all the limitations and exclusions described in these Limited Warranties, warrants the following products and parts against material manufacturing defects for the duration set forth next to that product or part in the table below.

Product Part	Limited Warranty Duration	Labor Coverage
Frames Used in Upholstered & Leather Products	Limited Lifetime Warranty*	1 Year
Springs The metal spring systems are generally, sinuous, wire seat springs, and, where applicable, back springs.	5 Year Limited Warranty	1 Year
Recliner Mechanisms	3 Year Limited Warranty	1 Year
Sleeper Mechanisms	3 Year Limited Warranty	1 Year
Unattached Cushioning** Unattached Cushion means each cushion core in a unattached (loose) seat cushion.	1 Year Limited Warranty	1 Year
Attached Cushioning** Attached Cushion means each cushion core in a seat cushion which is attached to the product.	1 Year Limited Warranty	1 Year
Leather and Upholstery Fabric***	1 Year Limited Warranty	1 Year
Top of Bed Top of Bed means comforters, bed skirts, pillow shams, and any accent pillows included with a comforter set.	30 Days	30 Days
Finishes and all Other Furniture Products Finishes and all other Furniture Products means all finishes and other parts, components, and other furniture products no specifically included in the above Limited Warranties, including but not limited to dining room tables, chairs, occasional tables, beds, dressers, sleeper mattresses, marble tops, granite tops, desks, curio cabinets, china cabinets, buffets, entertainment centers, lamps, electrical components (other than light bulbs), recliner pull cords and handles incorporated into any furniture product.	1 Year Limited Warranty	1 Year

*As used in these Limited Warranties, "lifetime" means the normal useful life of the product under reasonable use.

**All seat cushion cores in both Unattached Cushioning and Attached Cushioning will soften with normal use and will conform to the shape of the user. This shall be considered normal wear, and shall not be considered a loss of resiliency or a material manufacturing defect.

***The Leather and Upholstery Fabric Limited Warranty also includes seam slippage, cracking, and dye transfers. Leather is a natural product, and, as such, each hide will reflect its own individuality. Some variations of shade and tone are to be expected, as are nicks, scratches, and wrinkles that only occur in genuine leather; these characteristics are in no way to be considered a defect. These Limited Warranties do not cover tears, flattening of nap, pilling, fading, or shrinking and is not valid when heavy soiling or abuse is evident. These Limited Warranties also do not cover protective finishes, velvets, velvet types, since by their very nature, these fabrics are of soft texture and will crush, shade and mark more readily than most fabrics; these characteristics are in no way to be considered a defect.

LIMITATIONS AND EXCEPTIONS

The following limitation and exceptions apply to the Limited Warranties:

Remedy
Under these Limited Warranties, for all of its products other than an Unattached Cushion (as defined in the topical heading "Unattached Cushioning"), the sole liability of Warrantor is limited to repair, or at its option, replacement the applicable product or part not in conformity with these Limited Warranties. REFUNDS ARE NOT AVAILABLE. If within the warranty period, identical materials are unavailable at the time of repair or replacement, Warrantor reserves the right to substitute materials of equal or better quality. Replacement fabrics may vary in color from the original due to dye lot differences.
In addition, during the period of any applicable Labor Coverage, Warrantor will pay, within one year from the date of purchase, reasonable and customary labor rates to repair or replace the defective parts (at Warrantor's option) and shipping costs from the retailer to and from Warrantor, at no charge to the original retail purchaser. After the expiration of the Labor Coverage or for all products or parts not covered by Labor Coverage, the original retail purchaser will be responsible for labor, packing, and all shipping and transportation costs. The costs associated with transporting the furniture or parts from your home to the retailer or from the retailer to your home are excluded from all Limited Warranties.

For Unattached Cushions with a material manufacturing defect, Warrantor will replace the defective Unattached Cushion provided that the original retail purchaser during the warranty period (i) complies with the Claim Procedure set forth in these Limited Warranties and (ii) if requested by Warrantor, returns the defective cushion core contained within an Unattached Cushion to Roomsolutions Brand, Attn: Director of Quality, One Ashley Way, Arcadia, WI 54612. The remedy

specified in the paragraph is Warrantor sole liability related to Unattached Cushions.

Any item repaired or replaced under these Limited Warranties will be covered by the Limited Warranties for the remainder of the original warranty period only.

All Products

These Limited Warranties do not apply to (i) rented, business, commercial, institutional, or other non-resident uses (ii) merchandise that was, at any time, used as a floor sample or display model, (iii) any merchandise purchased “as is” or second-hand, (iv) any merchandise purchased at a distress sale or a going-out-of-business sale, (v) any merchandise purchased from a liquidator, or (vi) merchandise obtained from a rental retailer. All warranties, whether express or implied, cover only normal household usage. No warranty, express or implied, applies to any condition resulting from misuse, abuse, delivery or transportation damage, nor any condition resulting from incorrect or inadequate maintenance, cleaning or care. These Limited Warranties are null and void if furniture has been moved from original point of delivery to consumer.

Chemical Treatments

These Limited Warranties do not cover damages or defects caused by use of chemical treatments or protective coatings on the finish, leather, or upholstered fabric by the retailer or the original retail purchaser, and any such chemical treatments or protective coatings voids all warranties of Warrantor.

Leather, Upholstered Fabric and Finishes

The Limited Warranties on “Leather”, “Upholstered Fabric” and “Finishes and all Other Furniture Products” do no cover (i) damages resulting from excessive soiling, improper or unapproved cleaning methods, (ii) fading or other damages resulting from exposure to sunlight, (iii) damages resulting from household humidity, or (iv) damages resulting from any liquid, including but not limited to alcohol and water. CAUTION: Any use of improper or unapproved cleaning methods voids all warranties of Warrantor.

Modifications to Products

These Limited Warranties do not apply to any products that have been altered by any person, dealer, or company without the express written authorization of Warrantor.

Implied Warranties

IMPLIED WARRANTIES, INCLUDING ANY OF MERCHANTABILITY AND FITNESS FOR A PARTICULAR PURPOSE IMPOSED ON THE SALE OF THIS FURNITURE AND ITS PARTS UNDER STATE LAW, ARE LIMITED IN DURATION TO THE WARRANTY PERIOD AND NO WARRANTIES APPLY AFTER THAT PERIOD. SOME STATES DO NOT ALLOW LIMITATIONS ON HOW LONG AN IMPLIED WARRANTY LASTS, SO THE ABOVE LIMITATIONS MAY NOT APPLY TO YOU.

DISCLAIMER

NO OTHER EXPRESS WARRANTY HAS BEEN MADE OR WILL BE MADE ON BEHALF OF WARRANTOR WITH RESPECT TO THE FURNITURE AND ITS PARTS, OR THE OPERATION, REPAIR, OR REPLACEMENT OF THE FURNITURE AND ITS PARTS. FURTHERMORE, NO REPRESENTATIVE OF WARRANTOR OR ITS DISTRIBUTORS OR RETAILERS IS AUTHORIZED TO MAKE ANY CHANGES OR MODIFICATIONS TO THESE LIMITED WARRANTIES.

SOME RETAILERS OFFER EXTENDED OR ADDITIONAL WARRANTIES, INCLUDING BUT NOT LIMITED TO EXTENDED OR ADDITIONAL FABRIC WARRANTIES, EITHER FROM THE RETAILER OR THROUGH A THIRD-PARTY. WARRANTOR SHALL NOT BE LIABLE UNDER ANY EXTENDED OR ADDITIONAL WARRANTIES OFFERED BY ANY RETAILER OR THROUGH A THIRD-PARTY UNDER ANY CIRCUMSTANCES.

IN NO EVENT SHALL WARRANTOR BE RESPONSIBLE FOR CONSEQUENTIAL OR INCIDENTAL DAMAGES, SUCH AS LOSS OF USE, INCONVENIENCE, LOSS OR DAMAGE TO PERSONAL PROPERTY, WHETHER INDIRECT OR DIRECT, AND WHETHER ARISING IN CONTRACT OR TORT EVEN IF IT HAD REASON TO KNOW IN ADVANCE THAT SUCH DAMAGES WERE POSSIBLE. SOME STATES DO NOT ALLOW THE EXCLUSION OR LIMITATION OF INCIDENTAL OR CONSEQUENTIAL DAMAGES, SO THE FOREGOING LIMITATION OR EXCLUSION MAY NOT APPLY TO YOU.

IN NO EVENT SHALL WARRANTOR’S RESPONSIBILITY EXCEED THE PURCHASE PRICE OF THE PRODUCT OR ITS REPLACEMENT.

This warranty gives you specific legal rights, and you may also have other rights that vary from state to state.

CAUTION

Motion furniture (recliners, sleeper sofa, etc.) has many moving parts. Caution must be used in operation (opening, closing, etc.). Children should not be allowed to play on or operate motion furniture. Always leave recliners in an upright position and keep hands and feet clear of mechanism. Only the occupant should operate it.

CLAIM PROCEDURE

To obtain warranty services, the original retail purchaser must comply with the requirements of the Claim Procedure.

Contact the Roomsolutions authorized retailer from whom you purchased your furniture, to obtain warranty service. All claims must include the original bill of sale, the product serial number, and be filed within the applicable warranty period. Warrantor reserves the right to require defective parts be returned upon request. You must make arrangements with the retailer to schedule the transportation of the furniture or parts from your home to the retailer or from the retailer to your home. If the retailer from which you purchased the furniture has closed and you need service, contact Ashley in writing or call our Customer Service.

Signature Design Brand Warranty and Retailer Information

© October 2021, Ashley Furniture Industries, LLC. All rights reserved.
Signature Design is a registered trademark of Ashley Furniture Industries, LLC