DETAILED DIMENSIONS

8610-CR Stewart Cocktail Table

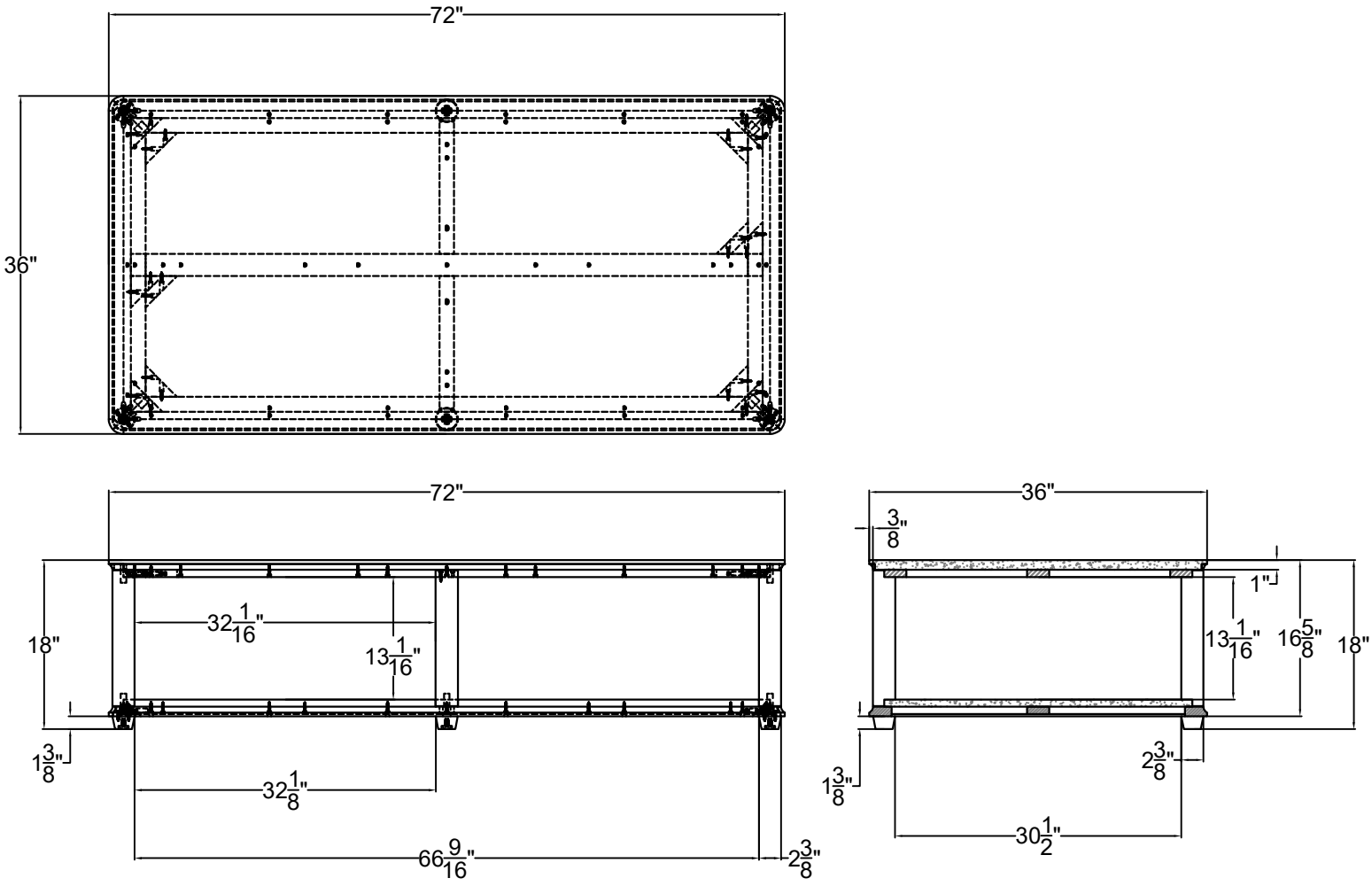

Due to the handcraed nature of our product, variations to plus or minus 1" of our listed measurements could occur. Specifications are subject to change without notice.