ASSEMBLY INSTRUCTIONS

Item #: Chair

Please identify and locate all assembly parts (see parts list) before discarding any packing materials.

Some parts may have become loose during transit.

Step 1: LEG ASSEMBLY INSTRUCTION

TURN OVER THE ITEM AND TAKE OUT THE LEGS AND BACK CUSHION FROM ZIPPERED POUCH AND ASSEMBLE THE LEGS AS PICTURES SHOW

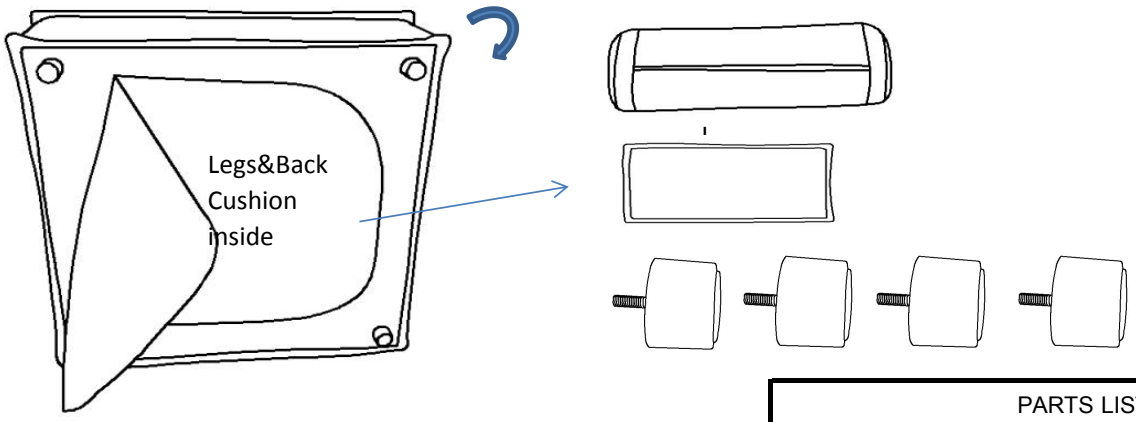

PARTS LIST			
NO	SKETCH	DESCRIPTION	QTY
1		BACK PILLOW-A	1PC
2		BACK PILLOW-B	1PC
3	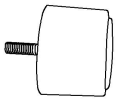	LEG	4PCS

STEP 2:ZIP THE BACK PILLOW TOGETHER AS BELOW

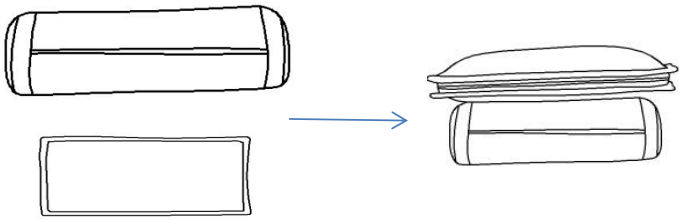

STEP 3:CONGRATULATIONS ON YOUR ASSEMBLE SUCCESS.

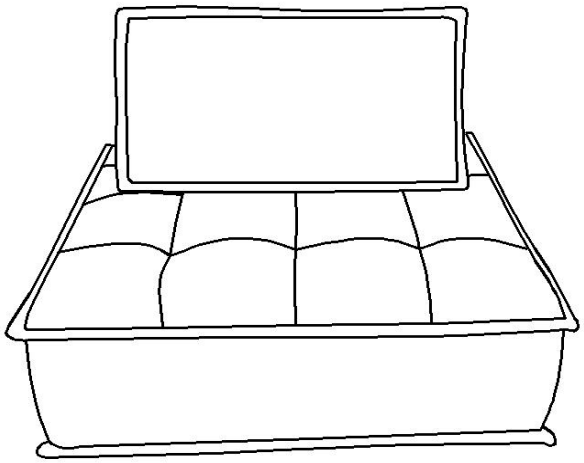

MADE IN CHINA